SEGA™ SERVICE MANUAL

SEGA SATURN (PAL)

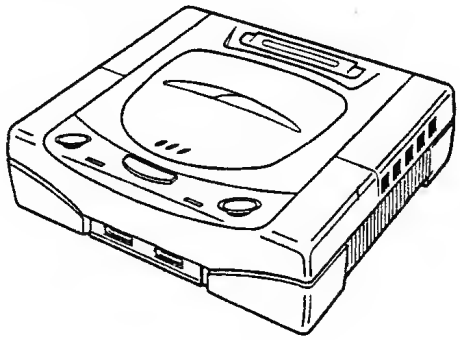

NO.	013 – 1
ISSUED	JUNE, 1995

CONTENTS

1. SPECIFICATIONS ····· 3
2. IDENTIFYING PARTS ····· 4
3. ACCESSORIES ····· 5
4. IDENTIFICATIONS AND LOCATIONS OF CIRCUIT BOARDS ···· 5
5. DISASSEMBLY PROCEDURE ····· 6
6. CD DRIVE MAINTENANCE AND ADJUSTMENT ····· 8
7. BLOCK DIAGRAM ····· 11
8. SCHEMATIC DIAGRAMS ····· 13
9. CIRCUIT BOARD DIAGRAMS ····· 27
10. PARTS SPECIFICATIONS ····· 32
11. EXPLODED VIEW & PARTS LIST ····· 70
    11-1. Exploded View ····· 70
    11-2. Mechanical Parts List ····· 71
    11-3. Electrical Parts List ····· 72
    11-4. Accessories/Package list ····· 77

Sega Enterprises, Ltd.

PROTECTION OF EYES FROM LASER BEAM DURING SERVICING

This set employs laser. Therefore, be sure to follow carefully the instructions below when servicing.

Warning

When servicing, do not approach the laser exit with the eye too closely. In case it is necessary to confirm laser beam emission. Be sure to observe from a distance of more than 30 cm from the surface of the objective lens on the optical pick-up block.

Caution: Invisible laser radiation when open and interlocks defeated avoid exposure to beam.

Caution

Use of controls or adjustments or performance of procedures other than those specified herein may result in hazardous radiation exposure.

This console is classified as a CLASS 1 LASER product.

SAFETY PRECAUTIONS

Notice: Comply with all cautions and safety related notes located on or inside the cabinet and on the chassis.

1. When replacing a chassis in the console, all the protective devices must be put back in place, such as barriers, non-metallic knobs, adjustment and compartment covers/shields, isolation resistors/capacitors, etc.
2. When service is required, observe the original lead-dress. Extra precautions should be taken to assure correct lead dress in the high voltage circuit.
3. Always use the manufacturer's replacement components. Especially critical components as indicated on the circuit diagram should not be replaced by other manufacturer's. Furthermore, where a short-circuit has occurred, replace those components that indicate evidence of overheating.

PRODUCT SAFETY NOTICE

Many electrical and mechanical parts have special safety-related characteristics. These are often not evident from visual inspection nor can the protection afforded by them necessarily be obtained by using replacement components rated for higher voltage, wattage, etc. Replacement parts which have these special safety characteristics are identified in this Service Manual. Electrical components having such features are identified by marking with a ⚠ in the parts list in this Service Manual. The use of a substitute replacement component which does not have the same safety characteristics as the SEGA recommended replacement one, shown in the parts list in this Service Manual, may create shock, fire, or other hazards. Product Safety is continuously under review and new instructions are issued from time to time.

CAUTION ON FUSE REPLACEMENT

Caution: For continued protection against risk of fire, replace only with same type, amperage, volt fuse.

Attention: Afin d'assurer une protection permanente contre tout risque d'amorçage électrique, replacer uniquement par un fusible de meme type et de amperes volts.

This symbol indicates a Fast Operating Type Fuse.

This symbol indicates a Time Lag Type Fuse.

SATURN
COMPATABILITY

Audio CD:

The normal audio Compact Disc is playable on the Saturn machine, and can be altered with all the effects of a modern Hi-fi and more. Surround sound, vocal cut-out for Karaoke, program sequence of tracks and shuffle to name but a few. You need no extra equipment to play music CDs on your Saturn.

CD+G:

CD and Graphics are a format where simple visuals can appear on the screen that relate to the music. These visuals might include stills of the band, or other pictures. You need to buy no extra equipment to use CD+G on your Saturn.

CD+EG:

CD and extended graphics is a new medium ready to be utilised by the music community. It is basically an enhanced version of what is described above in CD+G. You need no extra equipment to use CD+EG on your Saturn.

MPEG:

MPEG is the standard industry format for compressing Full Motion Video footage. This means that the footage takes up less disk space, and when it is to be viewed, the MPEG program decodes the footage and plays it on screen. The MPEG add-on is needed in order to use the MPEG video CDs and Philips CDi. At the current rate of compression one movie can fit on two CDs.

CDi:

Developed by Philips, CDi is an interactive CD format that can be used in a variety of educational and entertainment purposes. Using video footage and CD quality sound CDi has become an industry leader in the field of interactive fun. The MPEG add-on is required to access the full range of CDi software

Kodak Photo CD:

Photos stored on CD have theoretically infinite life, are always picture perfect and will never fade or be otherwise damaged. The Saturn can access Kodak Photo CDs with the use of another Saturn CD which allows the user to see display the photos in various ways. There are many Kodak Photo CD stores open in the major cities.

Frame Buffering: A technique to maximise graphic display performance by letting the graphics processor chip "set aside" images it has already calculated, allowing it to work on enerating the next fraction of a seconds visual images, all while the screen is still busy painting the last fraction of a second's display.

Playfields: The background(s), anything that is on screen that it not a sprite. When two playfields (layers of bacground) are contolled properly, parrallax scrolling can result.The Sega Saturn has a whole chip dedicated to controllingbackgrounds (the VDP2 or Video Display Processor 2") that can generate 5 distict layers of background at the same time.

Polygons/Second: (1000's of) The number of polygons of a given size that can be drawn on the screen in one second. This figure does not include the size of the polygons, nor their texturing, shading, or lighting.

Realtime: An important adjective that usually indicates the game display is being re-calculated every second, taking into account the full effects of the player's actions. When reffering to a game's response or speed, it means the game responds instantly to the player's commands.

Render: Drawing 3D graphical objects on a computer or game machine. "BUG" and "Clockwork Knight" are filled with beautifully rendered characters.

Texture Mapping: Copying a bit-map onto the faces of selected polygons to give the illusion of surface texture. "Daytona USA" is a great example of a texture mapped game.

Wireframe: A connect the dots approach to showing graphical objects by drawing lines between sets of points that make up a geometric outline.

Dynamic Perspective: Constantly changing the point of view ("camera angle") so that the players feel that they are weaving in and around the on-screen action. Typically requires strong scaling and rotational capabilities.This can be seen on Sega Sports games on Saturn.

1. SPECIFICATIONS

Ratings

Model	MK – 80200-50
Power supply	AC220-240 V 50/60 Hz
Power consumption	Approx. 20 W
Operating environment	Temperature 5 ℃ to 35 ℃ Humidity10% to 80% RH (no condensation)
Dimensions	260 mm(W) × 230 mm(L) × 83 mm(H) (10.2 inches) × (9.0 inches) × (3.2 inches)

Specifications

CPU	Master	32bit RISC SH2 (28.4 MHz, 25MIPS)
	Slave	32bit RISC SH2 (28.4 MHz, 25MIPS)
	Sound	68EC000 (11.3 MHz)
Memories	Work RAM	16 Mbit
	Video RAM	12 Mbit
	Sound RAM	4 Mbit
	CD Buffer RAM	4 Mbit
	IPL ROM	4 Mbit
	Backup RAM	256 Kbit
Graphics	Resolution	320 × 224 dot etc.
	Colors	1024/2048 (16,770,000 simultaneous transmission)
	Sprite	Enlargement, Reducation, Rotation, Transformation
Scroll	5 screen maximum	
	XY Scroll	4
	Rotation	2
	Enlargement / reduction	2
	Window	2
	Special features	Vertical cell scroll
		Lateral line scroll
		Enlargement / reduction
CG Functions	Polygons	Specialized hardware
	Special features	Wire frame
		Flat shading
		Gouraud shading
Sound	PCM & FM sound source	32 channels 16 bit sampling Sampling rate 44.1 kHz max. Audio DSP
CD-ROM	Intelligent double-speed CD drive	

【Note】 Characteristics and specifications may be changed without notice.

2. IDENTIFYING PARTS

2-1. Front View of Console

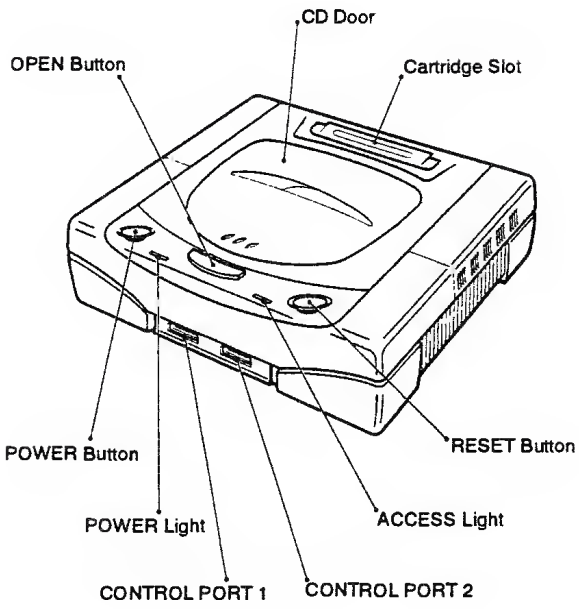

2-3. Control pad

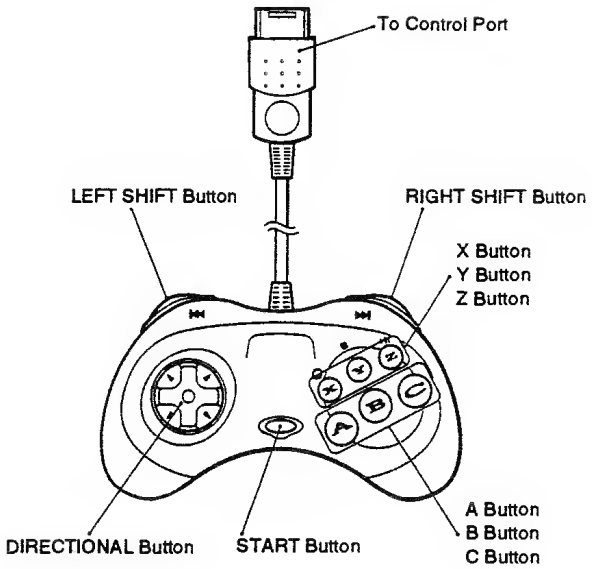

2-2. Back View of Console

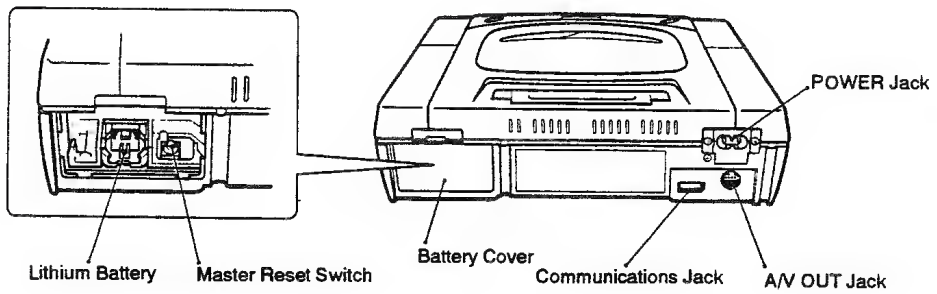

3. ACCESSORIES

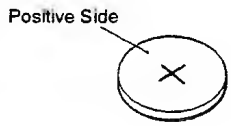

Lithium Battery (CR2032)

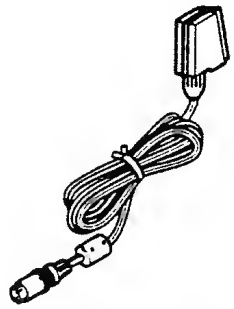

RGB Cable

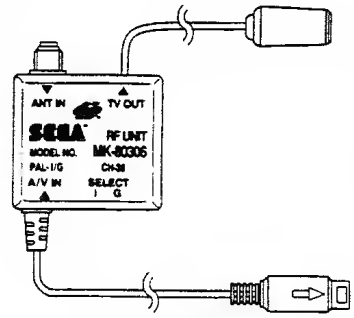

RF UNIT

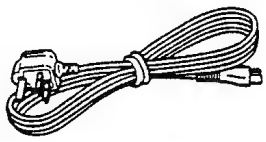

AC Cable [UK]

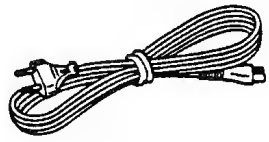

AC Cable [SOE]

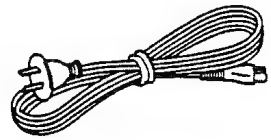

AC Cable [AUSTRALIA]

4. IDENTIFICATIONS AND LOCATIONS OF CIRCUIT BOARDS

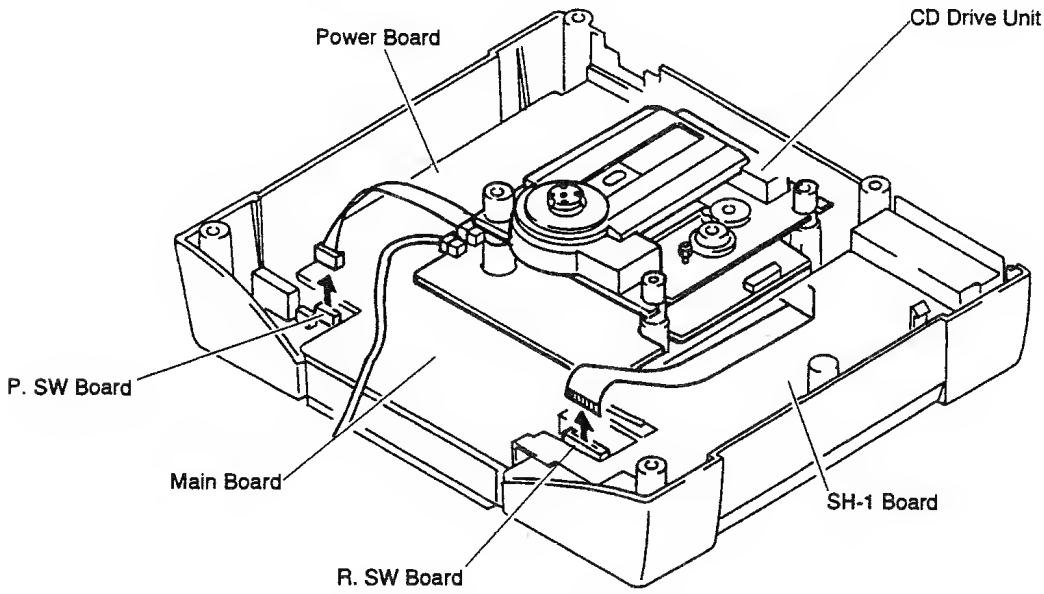

Fig. 4-1

5. DISASSEMBLY PROCEDURE

5-1. Top Case Removal

1) Remove six screws Ⓐ and then the top case in the direction of the arrow.

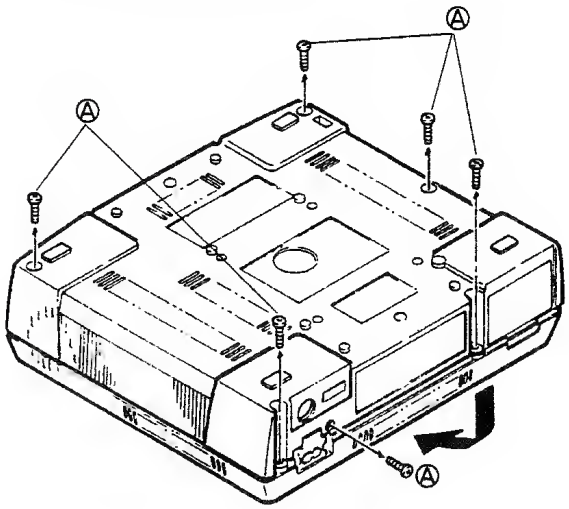

Fig. 5-1

5-2. CD Compartment Lid Removal

1) Remove two screws Ⓑ and then the bracket lid CD spring.
2) Remove spring Ⓒ.
3) Remove two screws Ⓓ and then the oil dumper.
4) Push the lever in the direction of arrow Ⓔ to release the boss and then push the lever in the direction of arrow Ⓕ to remove the CD compartment lid.

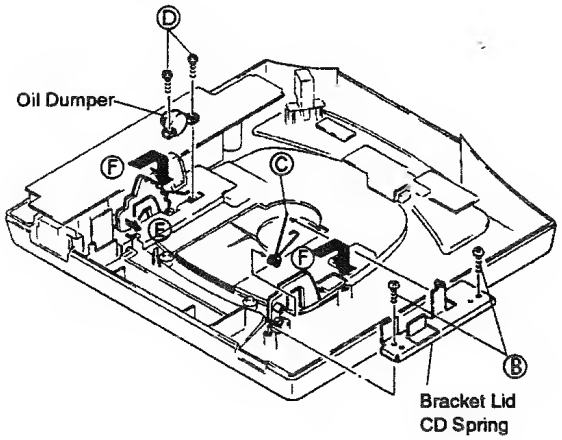

Fig. 5-2

5-3. CD Drive Unit Removal

1) Disconnect two connectors and one flat cable.
2) Remove the CD drive unit in the direction of arrow Ⓖ.

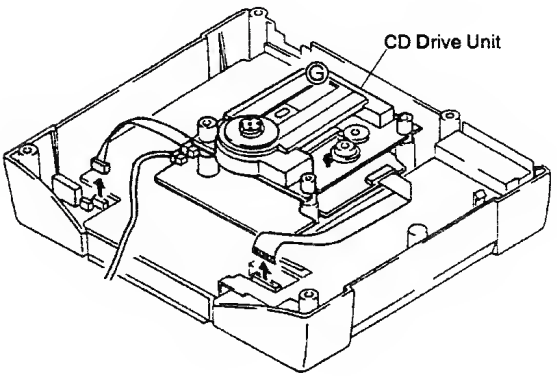

Fig. 5-3

5-4. SH-1 Board Removal

1) Remove four screws Ⓗ and then the top shield plate.
2) Remove screw Ⓘ and release three tabs, then lift the SH-1 board in the direction of arrow Ⓙ to remove it.

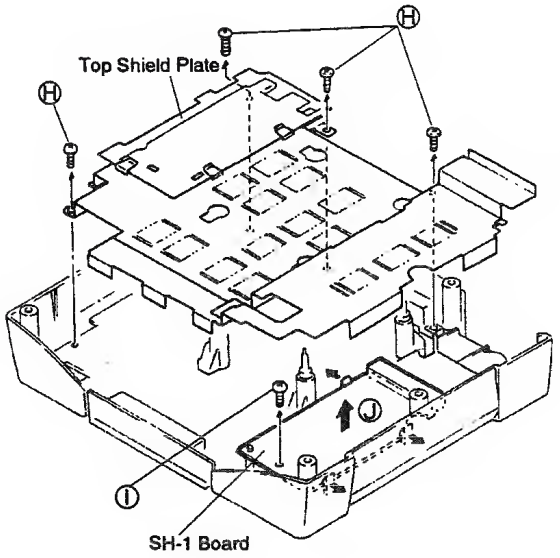

Fig. 5-4

5-5. Main Board Removal

1) Remove four screws Ⓚ holding the CD drive unit supports.
2) Remove five screws Ⓛ and then the main board.

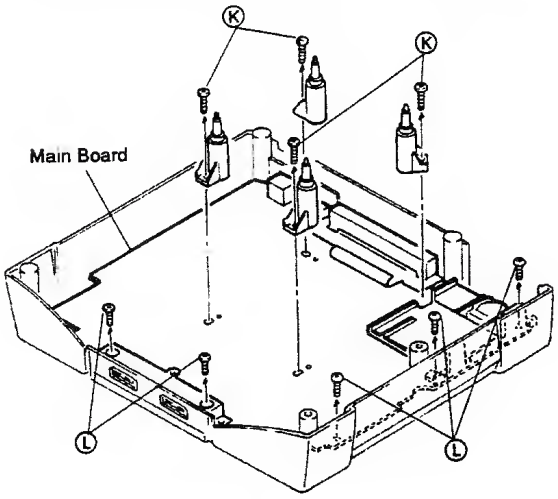

Fig. 5-5

5-6. Power, Power Indicator and R. SW Boards Removal

1) Remove three screws Ⓜ and then the power board.
2) Remove screw Ⓝ and then the power indicator board.
3) Remove two screws Ⓞ and then the R. SW board.

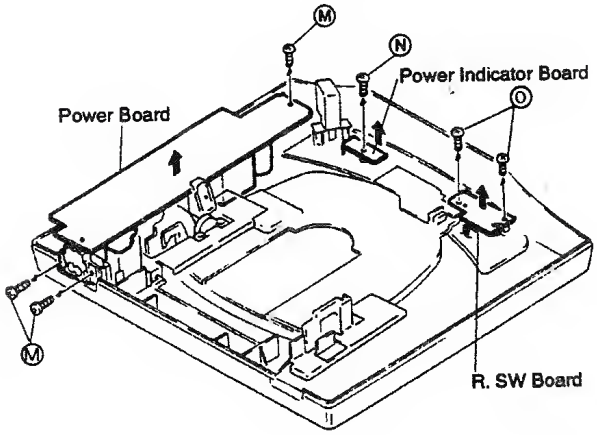

Fig. 5-6

6. CD DRIVE MAINTENANCE AND ADJUSTMENT

6-1. Maintenance of Pickup

1) Checking the laser diode

As the laser diode wears out, the RF level (amplitude of eye pattern) becomes lower.

Check that the RF level is 0.8V − 1.4Vp-p during maintenance. If the RF level is less that 0.8Vp-p then the pickup should be replaced.

2) Variable resistor on the APC board

The variable resistor attached to the pickup on the APC board is used to adjust the output power of the laser. This adjustment is done at the factory and can not be performed in the field. If the laser's output power is low, the laser diode has worn out and should be replaced. Adjusting this variable resistor may cause damage to the laser diode.

6-2. Laser Pickup Replacement Procedure

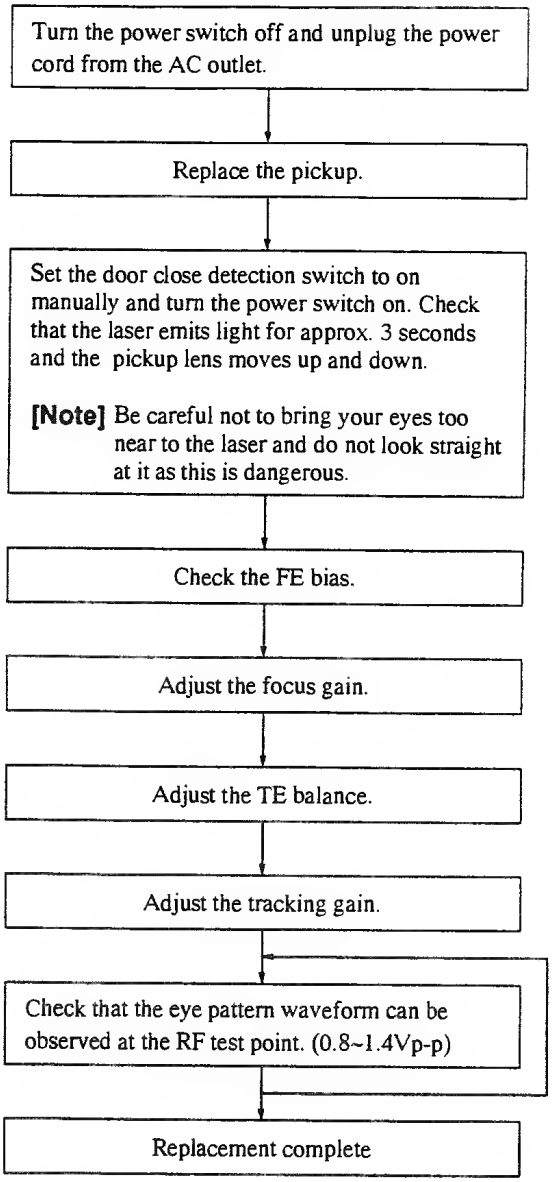

[Note] Since the adjutments influence each other, it may be necessary to repeat them 2 to 3 times. times.

Adjustment Preparation

Apply markings to the positions of the variable resistors before adjustment. If the adjustment are out of the specifications, the following symptoms may occur.

[Focus gain]

If the focus adjustment is too low the pickup lens will not be able to focus properly and the disk will not rotate. If the adjustment is too high portions of a track may be skipped and noise will increase.

[Tracking gain]

If the tracking adjustment is too low the drive is more susceptable to shocks or bumps, portions of a track may be skipped or the disk time counter may stop.

If the adjustment is too high the pickup lens may oscillate leading to unstable or distorted sound.

The focus and tracking adjustments are done so as to mutually satisfy conflicting characteristics.

6-3. Test equipment and tools necessary for adjustment

1. Oscilloscope
2. DC voltmeter
3. Non-metallic adjustment screwdriver
4. Test CD (A-BEC TCD-792A)

6-4. CD Drive Unit Adjustment Procedure

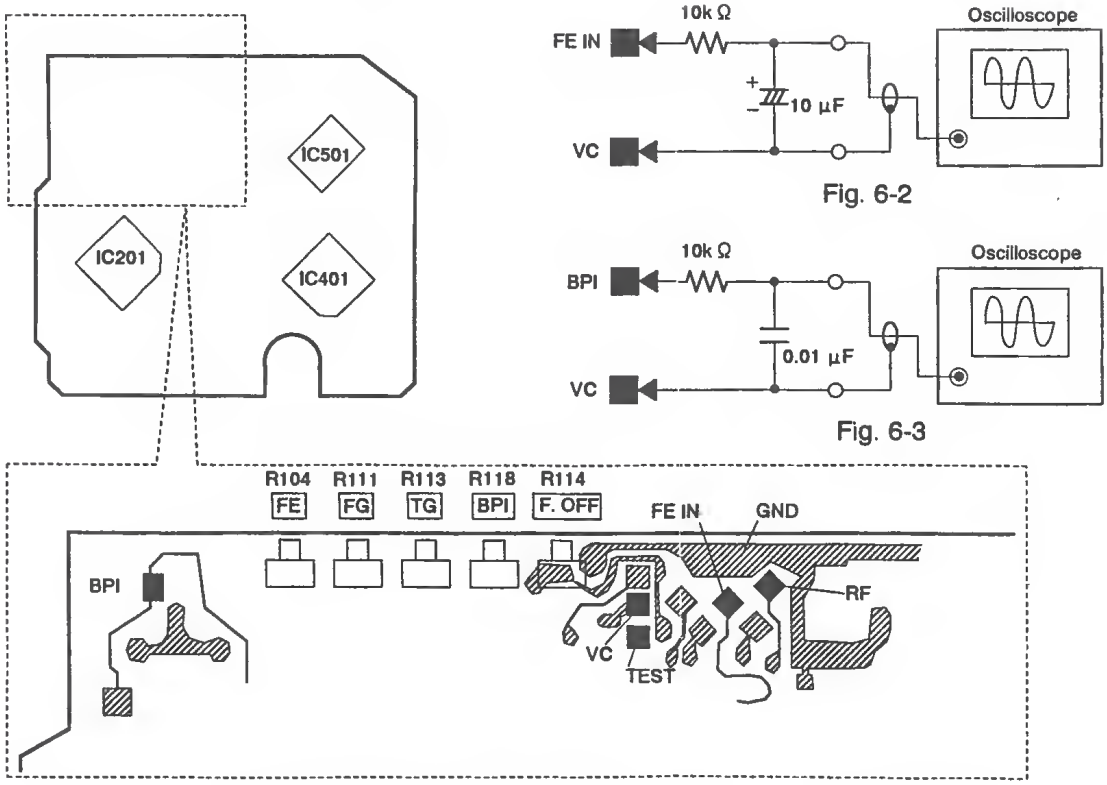

Fig. 6-1

Fig. 6-2

Fig. 6-3

6-4-1. FE (Focus Error) bias adjustment and focus gain adjustment

1. Connect the oscilloscope to test point FE IN as shown in Fig. 6-2.
2. Turn the power switch on and set the CD drive to the stop mode.
3. Adjust R114 (FE bios) so the DC voltage at the test point (FE IN) is 0V.
4. Play the first track of the test CD and adjust R111 (Focus gain) so the DC voltage is − 7mV.

6-4-2. FE balance and tracking gain adjustments

1. Connect the oscilloscope to test point BP IN as shown in Fig. 6-3.
2. Turn the power switch on and play the first track of the test CD.
3. After play has begun, connect the TEST pin to GND.
4. Adjust R104 (FE balance) so the center voltage of the waveform is 0V.
5. Adjust R113 (tracking gain) so the amplitude of the waveform is 0.4V as in Fig. 6-4.

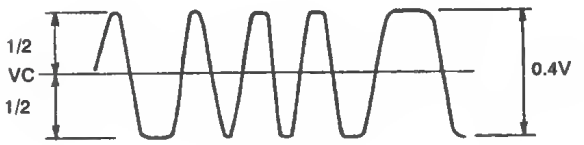

Fig. 6-4

7. BLOCK DIAGRAM

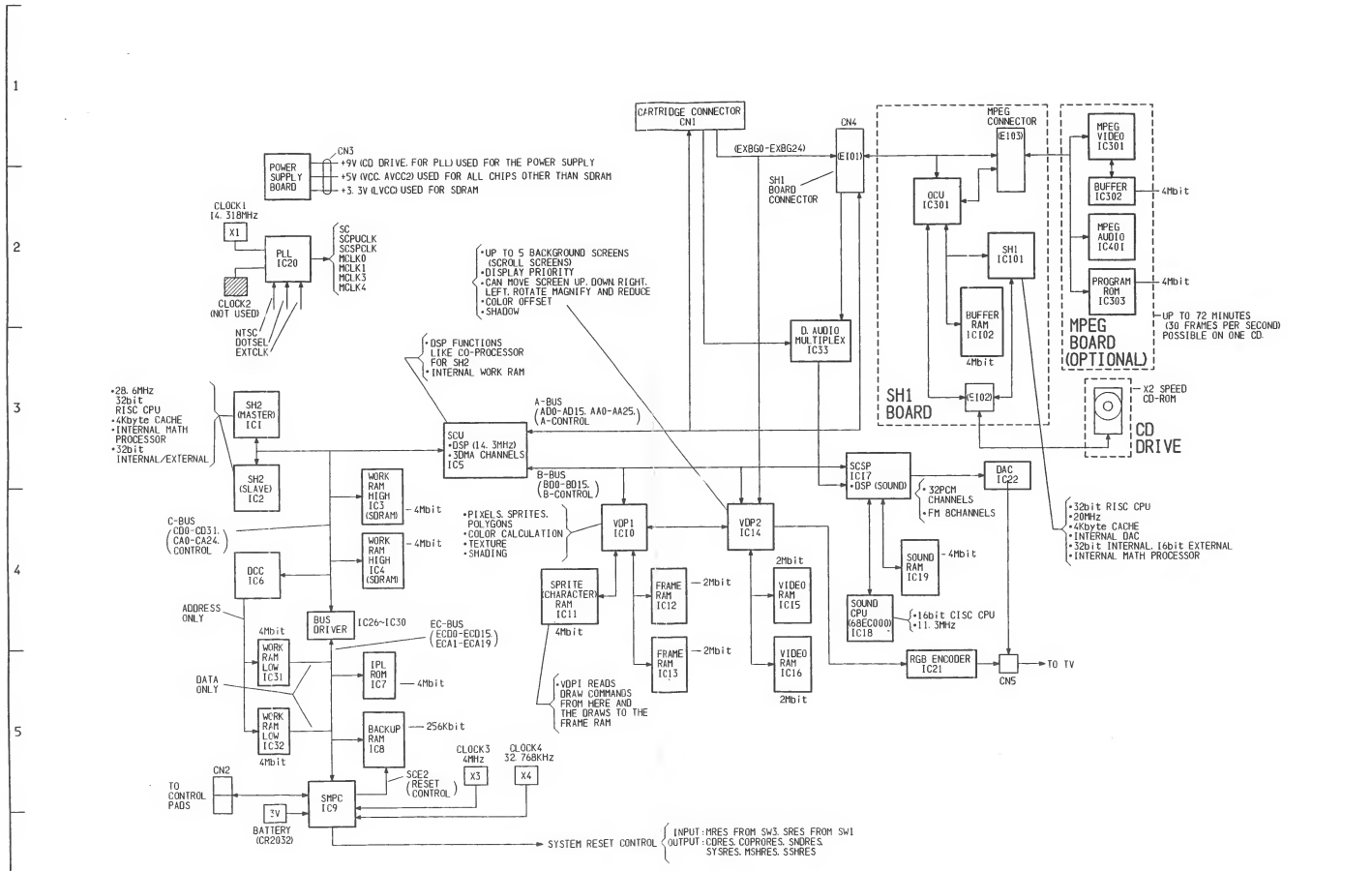

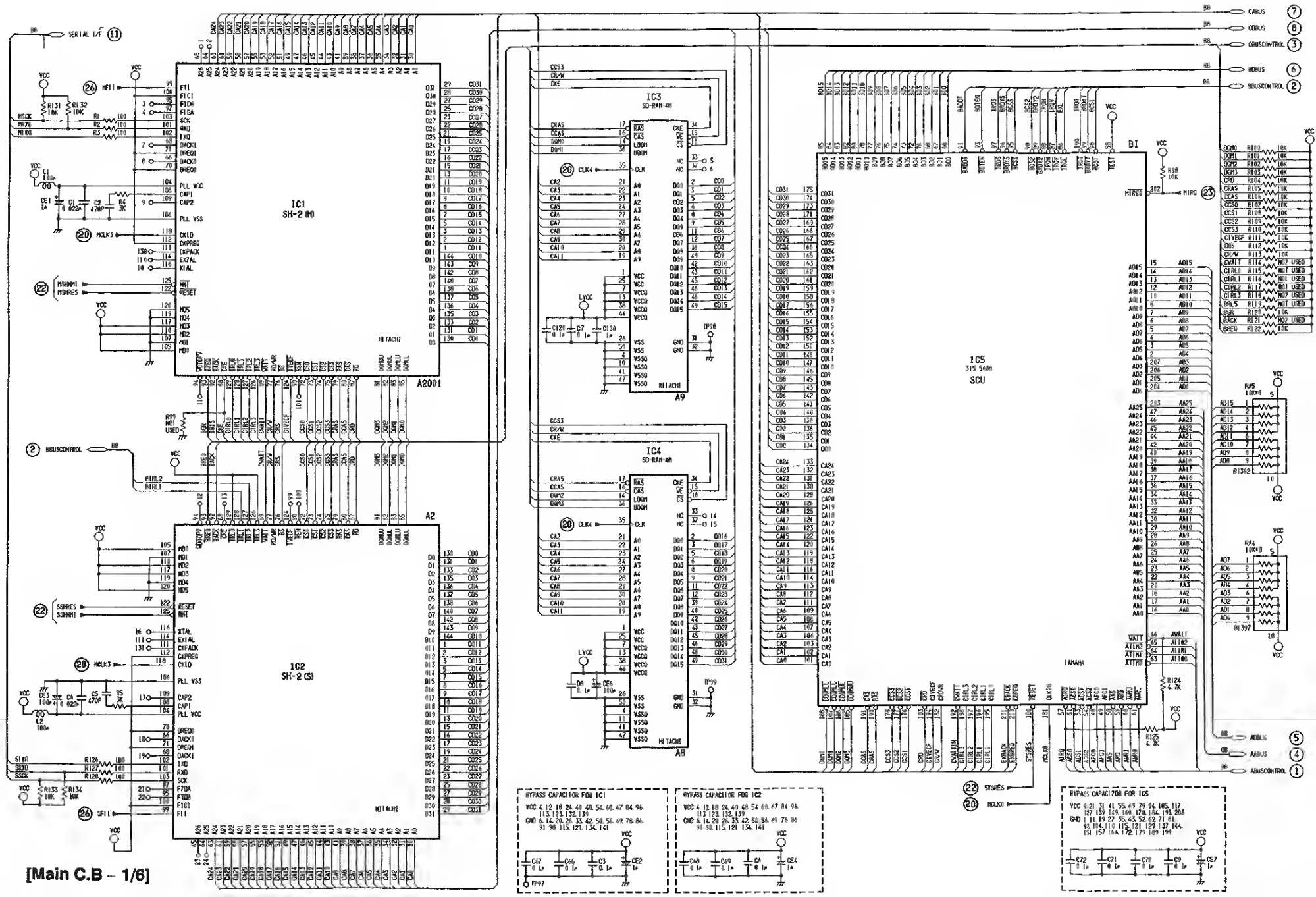
IC1
SH-2 (M)
IC2
SH-2 (S)
IC3
SD-RAM 4M
IC4
SD-RAM 4M
IC5
315 5686
SCU
A2001
A2
A9
A8
BI
SERIAL I/F
SBUSCONTROL
ABUSCONTROL
CABUS
CDBUS
CDBUSCONTROL
BDBUS
SBUSCONTROL
ADBUS
AABUS
SYSRES
MCLK0
MIRQ
BYPASS CAPACITOR FOR IC1
BYPASS CAPACITOR FOR IC2
BYPASS CAPACITOR FOR IC5

[Main C.B – 1/6]

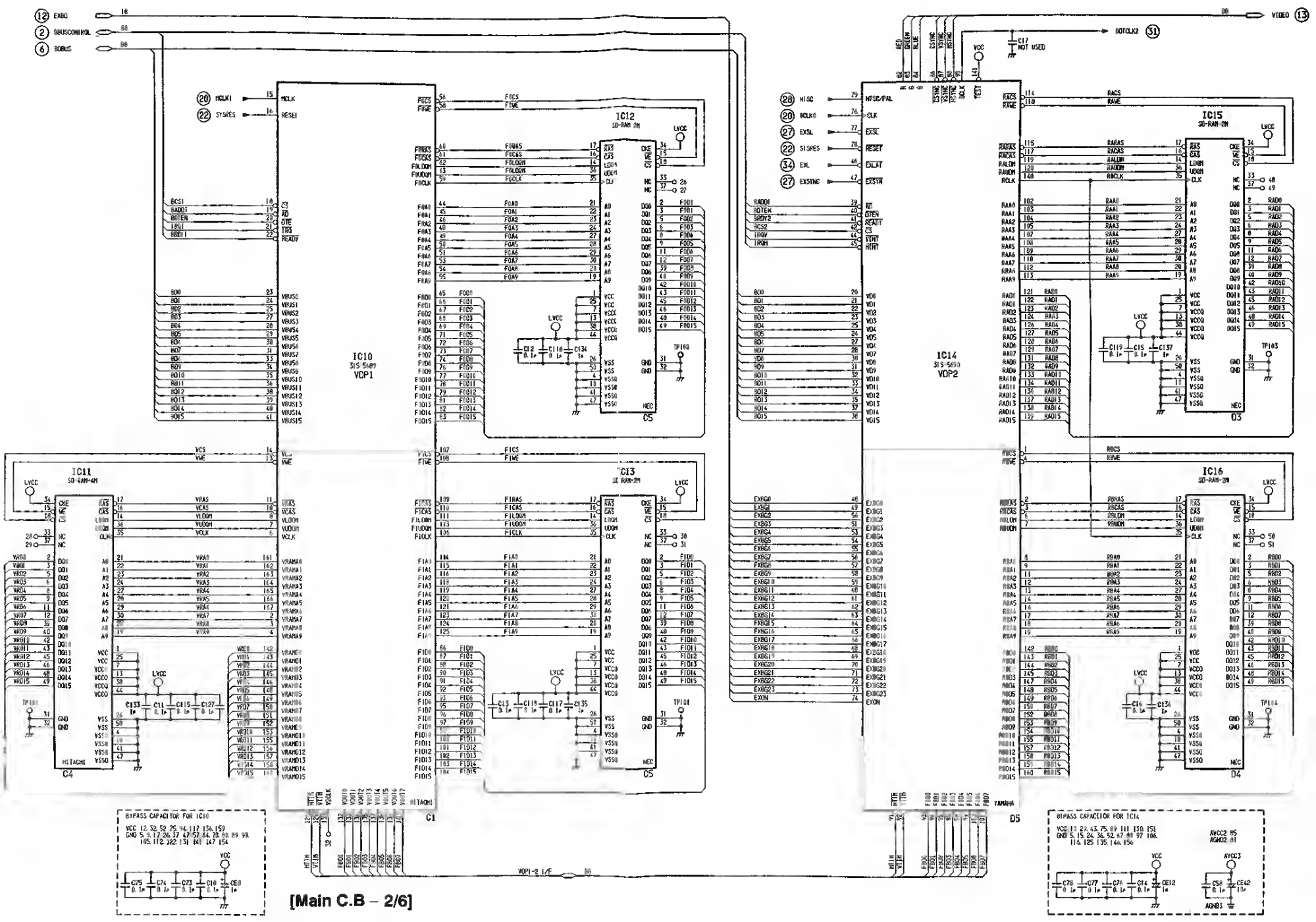
EXBG
SBUSCONTROL
SBUS
VIDEO
DOTCLK2
IC10
VDP1
IC11
IC12
IC13
IC14
VDP2
IC15
IC16
BYPASS CAPACITOR FOR IC10
BYPASS CAPACITOR FOR IC14
[Main C.B – 2/6]

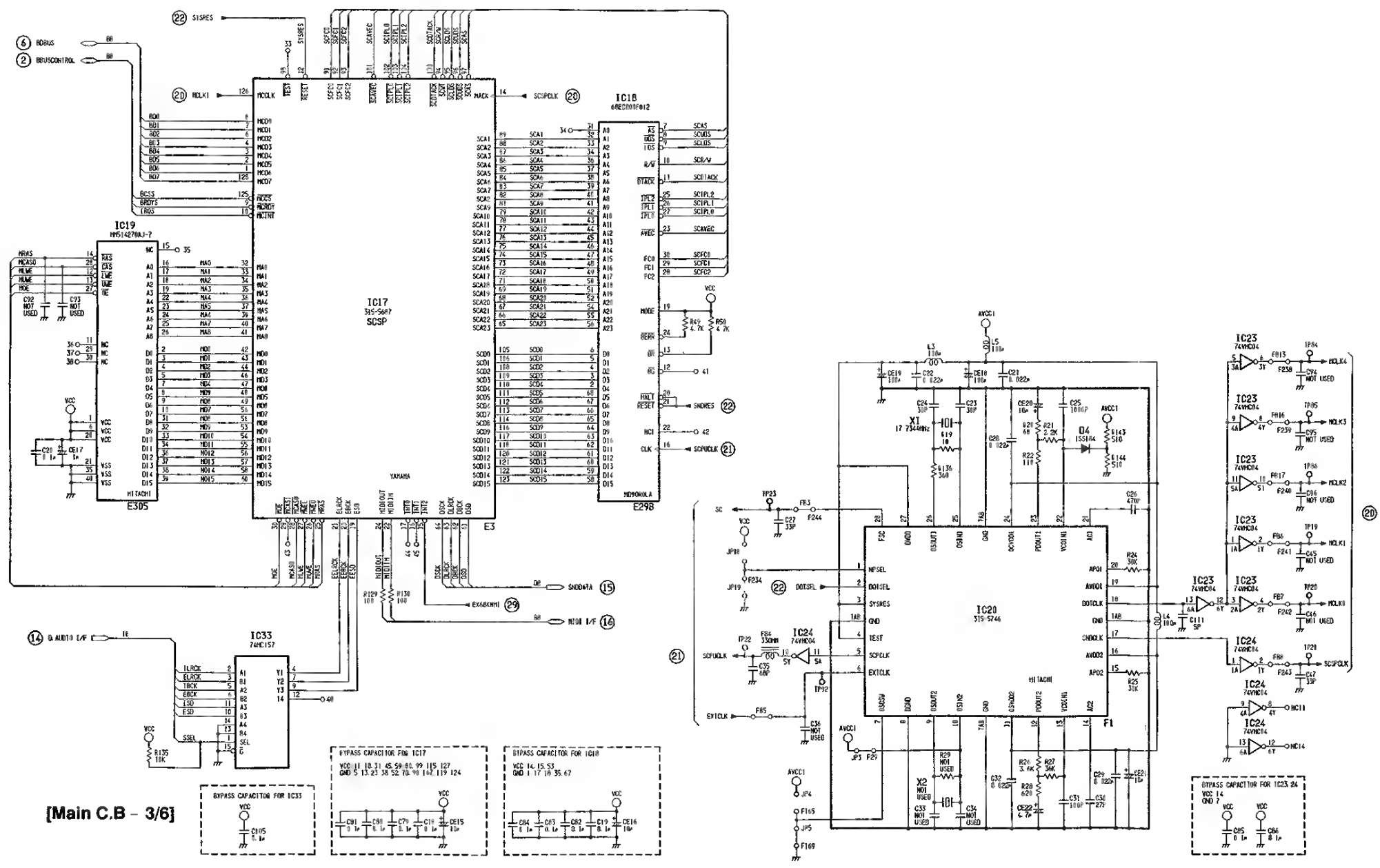
IC19
HM514270AJ-7
E305
IC17
315-5687
SCSP
YAMAHA
E3
IC18
68EC000FU12
E298
IC33
74HC157
IC20
315-5746
HITACHI
IC23
74VHC04
IC24
74VHC04
X1
17.7344MHz
X2
NOT USED
BYPASS CAPACITOR FOR IC33
BYPASS CAPACITOR FOR IC17
BYPASS CAPACITOR FOR IC18
BYPASS CAPACITOR FOR IC23,24
[Main C.B - 3/6]

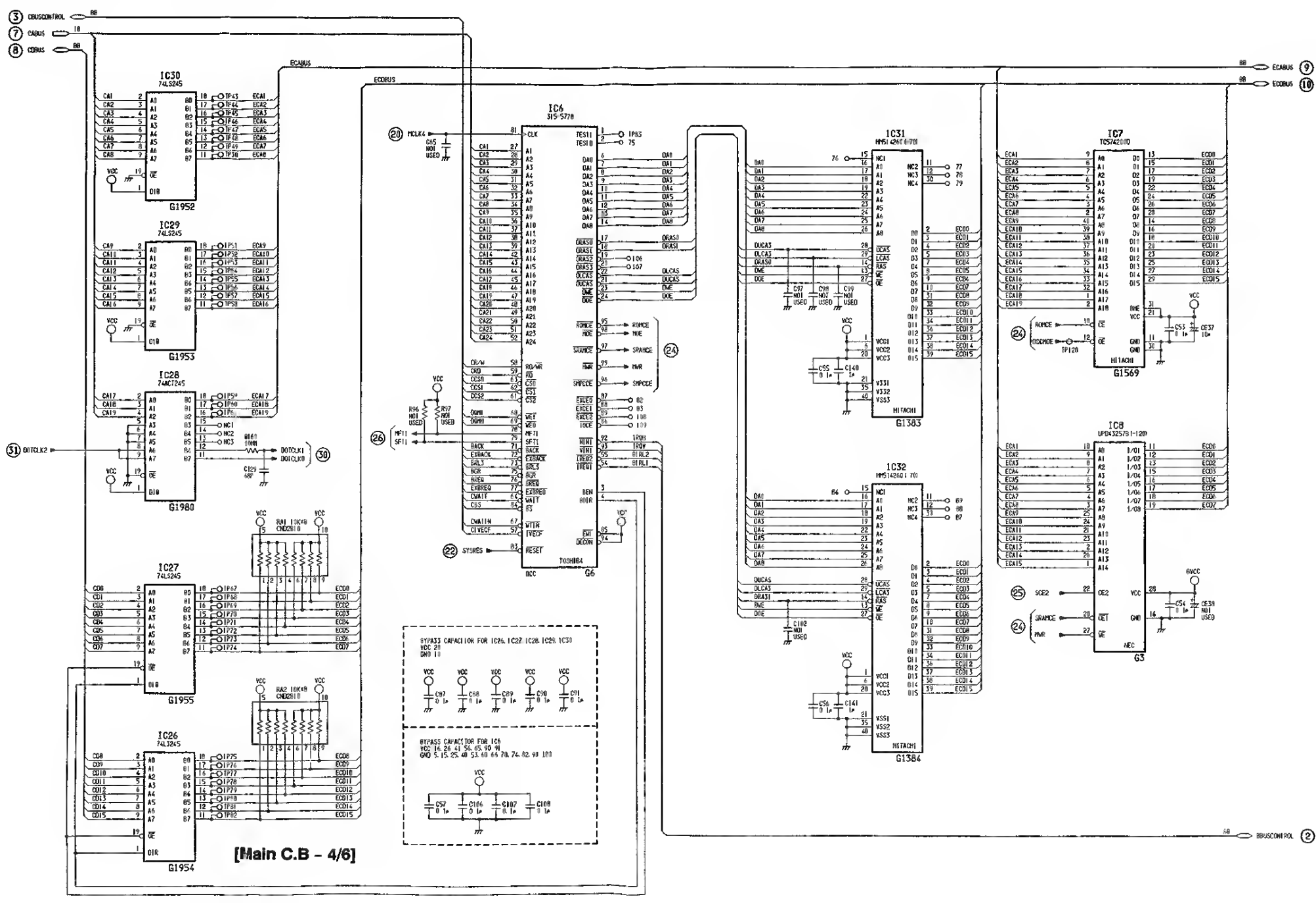
[Main C.B - 4/6]

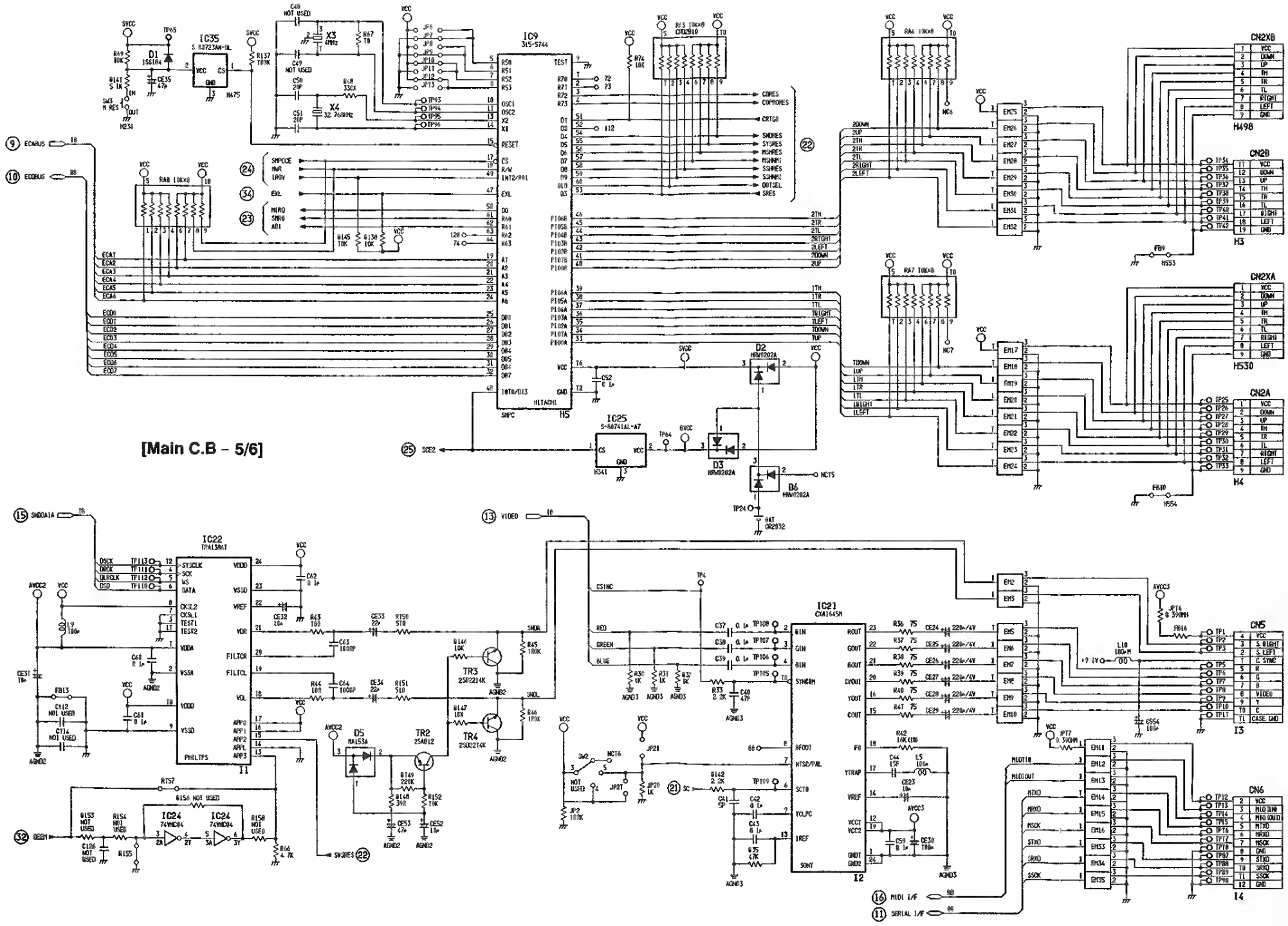
[Main C.B – 5/6]
IC9
315-5744
IC35
IC25
IC22
TRA1386T
IC21
CXA1645M
IC24
74VHC04
CN2XB
CN2B
CN2XA
CN2A
CN5
CN6
H498
H3
H530
H4
H5
I1
I2
I3
I4
D1
D2
D3
D5
D6
TR2
TR3
TR4
X3
X4
SMPC
HITACHI
SVCC
VCC
ECABUS
ECDBUS
SNDOA1A
VIDEO
DEEM
SVSRES
MIDI I/F
SERIAL I/F

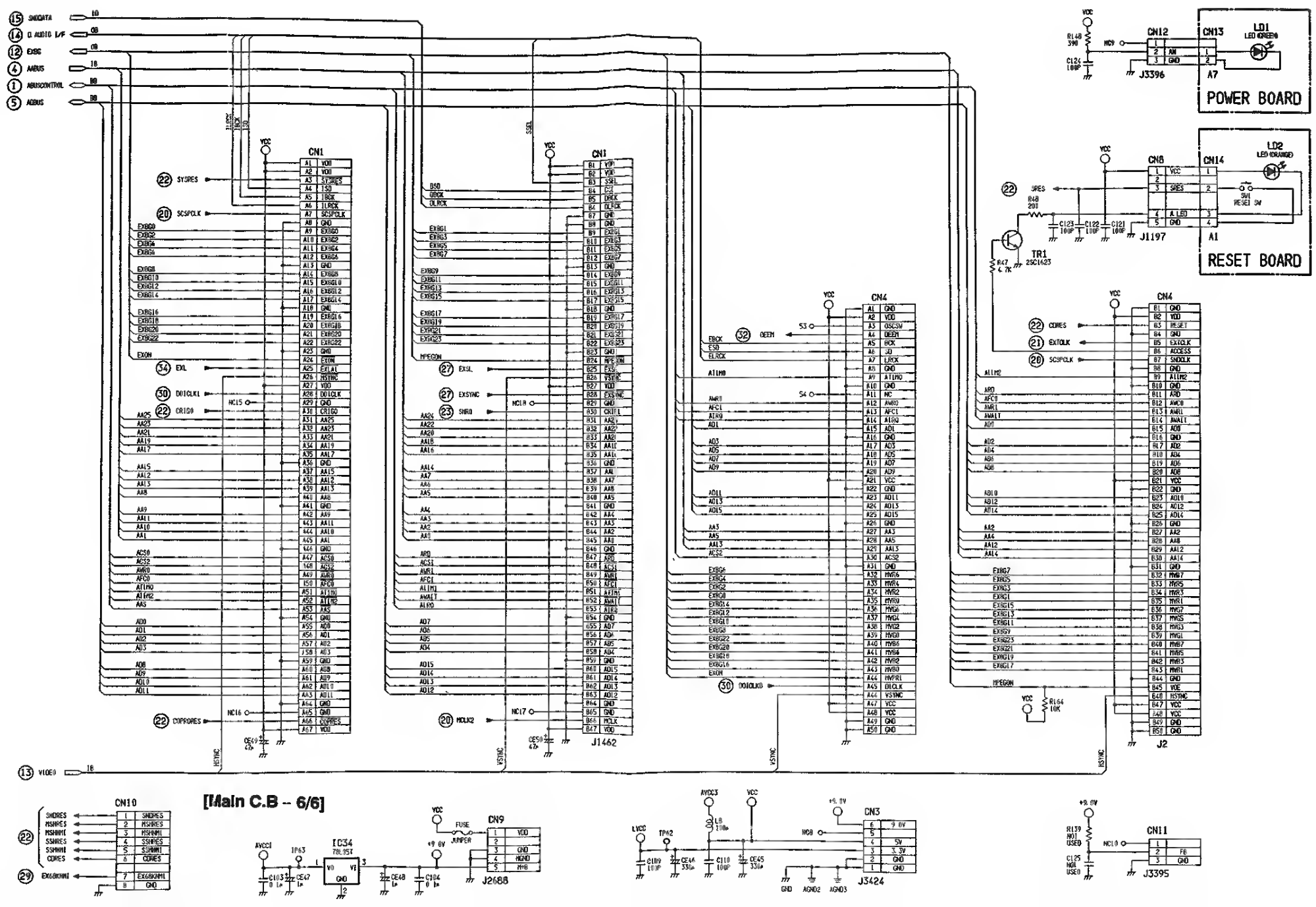

POWER BOARD
RESET BOARD
CN1
CN4
CN8
CN10
CN11
CN12
CN13
CN14
CN3
CN9
J1462
J2
J3396
J1197
J3395
J3424
J2688
TR1
2SC1623
LD1
LED (GREEN)
LD2
LED (ORANGE)
SW1
RESET SW
IC34
78L05T
FUSE
JUMPER
[Main C.B -- 6/6]

[SH-1 C.B]

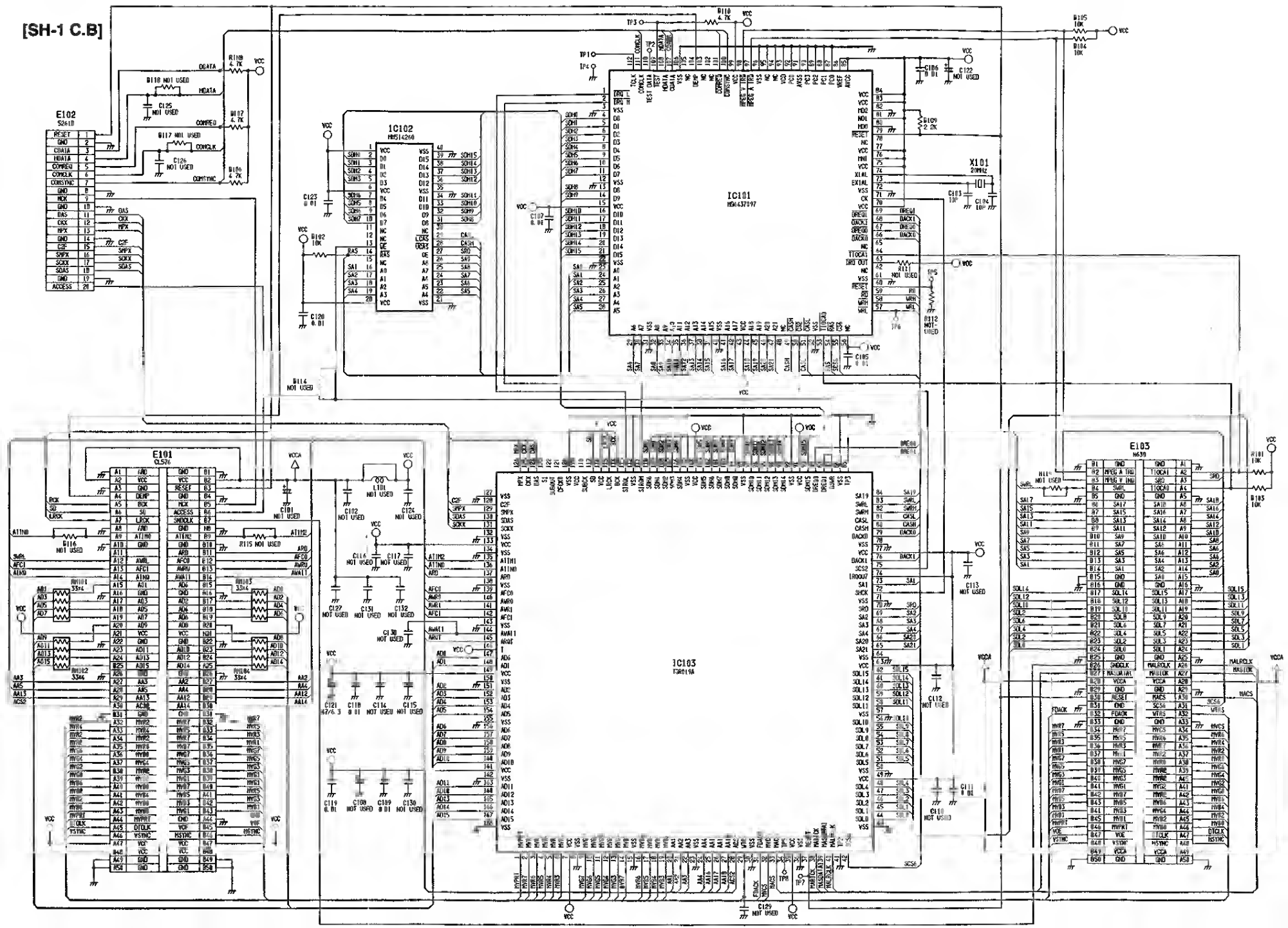

E102
S261D
IC102
MM514260
IC101
MM4437097
X101
20MHz
E101
CL576
IC103
TGR019A
E103
N630

9. CIRCUIT BOARD DIAGRAMS

9-1. Main Circuit Board

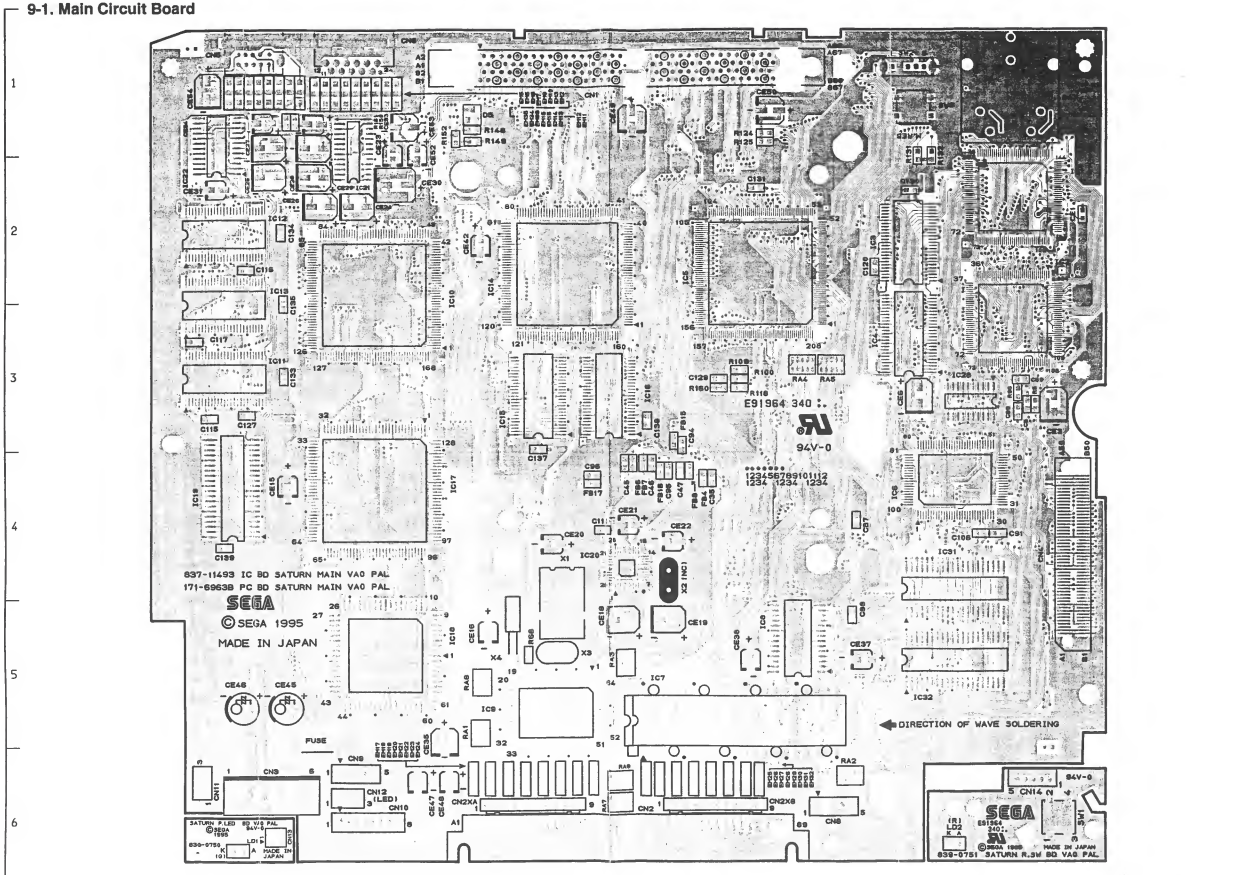

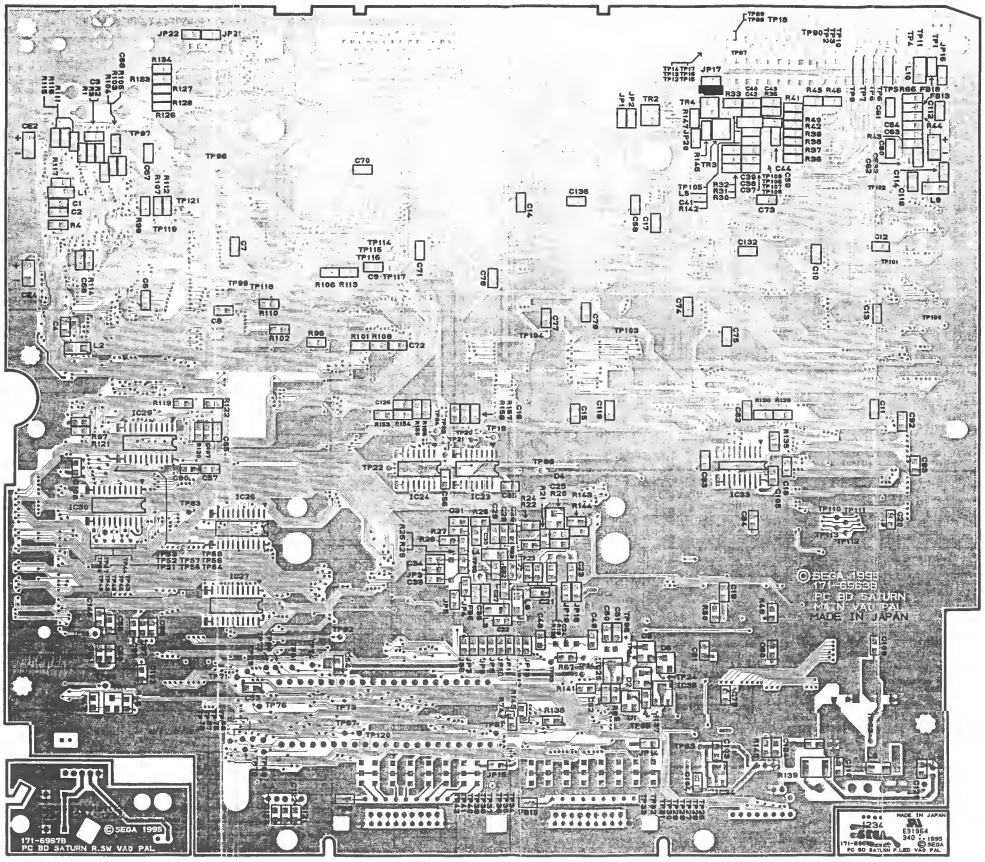
©SEGA 1995
171-6953B
PC BD SATURN
MAIN VAD PAL
MADE IN JAPAN
©SEGA 1995
171-6987B
PC BD SATURN R.SW VAD PAL

9-2. SH-1 Circuit Board

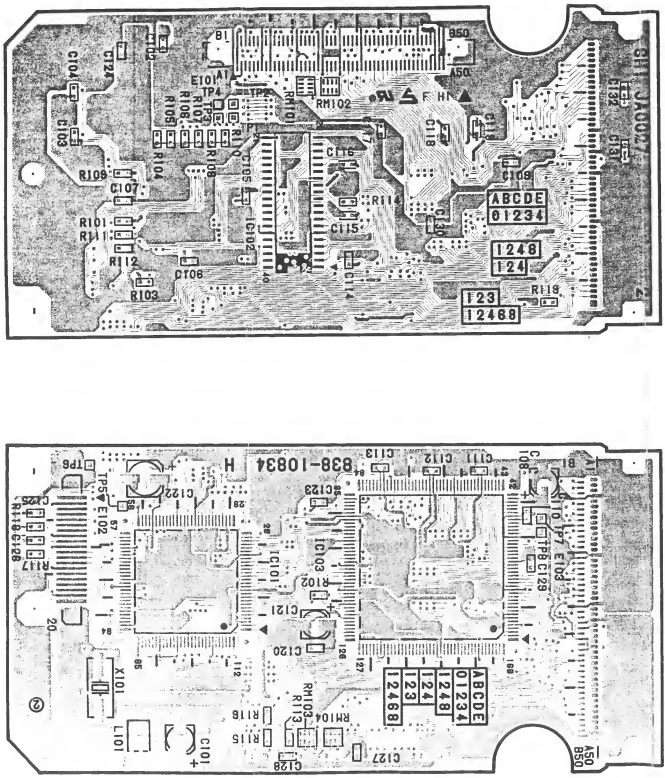

11. PARTS SPECIFICATIONS

IC1/2

IC HD6417095F28 QFP HITACHI
Parts No. : 315-0922A

IC HD6417095SF28 QFP HITACHI
Parts No. : 315-0998

■ Top View

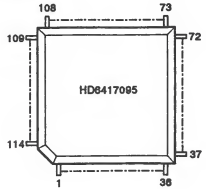

■ Description

No.	I/O	Pin Name	Function
1		D11	
2	I/O	D12	Data bus
3		D13	
4	–	VCC1	Power supply (5V)
5	I/O	D14	Data bus
6	–	VSS1	Power supply (0V)
7		D15	
8		D16	
9	I/O	D17	Data bus
10		D18	
11		D19	
12	–	VCC2	Power supply (5V)
13	I/O	D20	Data bus
14	–	VSS2	Power supply (0V)
15		D21	
16	I/O	D22	Data bus
17		D23	
18	–	VCC3	Power supply (5V)
19	I/O	D24	Data bus
20	–	VSS3	Power supply (0V)
21		D25	
22	I/O	D26	Data bus
23		D27	
24	–	VCC4	Power supply (5V)
25	I/O	D28	Data bus
26	–	VSS4	Power supply (0V)
27		D29	
28	I/O	D30	Data bus
29		D31	
30		A0	
31	I/O	A1	Address bus
32		A2	
33	–	VSS5	Power supply (0V)
34		A3	
35		A4	
36	I/O	A5	Address bus
37		A6	
38		A7	
39		A8	
40	–	VCC5	Power supply (5V)

No.	I/O	Pin Name	Function
41	I/O	A9	Address bus
42	–	VSS6	Power supply (0V)
43	I/O	A10	Address bus
44		A11	
45		A12	
46		A13	
47		A14	
48	–	VCC6	Power supply (5V)
49	I/O	A15	Address bus
50	–	VSS7	Power supply (0V)
51	I/O	A16	Address bus
52		A17	
53		A18	
54	–	VCC7	Power supply (5V)
55	I/O	A19	Address bus
56	–	VSS8	Power supply(0V)
57	I/O	A20	Address bus
58		A21	
59		A22	
60	–	VCC8	Power supply (5V)
61	I/O	A23	Address bus
62	–	VSS9	Power supply (0V)
63	I/O	A24	Address bus
64		A25	
65		A26	
66	O	DACK0	DMAC0 acknowledge
67	–	VCC9	Power supply (5V)
68	O	DACK1	DMAC1 acknowledge
69	–	VSS10	Power supply (0V)
70	I	DREQ0	DMAC0 request
71	I	DREQ1	DMAC1request
72	O	$\overline{CS0}$	Chip select 0
73	O	$\overline{CS1}$	Chip select 1
74	O	$\overline{CS2}$	Chip select 2
75	O	$\overline{CS3}$	Chip select 3
76	I/O	$\overline{BS}$	Bus cycle start
77	I/O	RD/$\overline{WR}$	Read/write
78	–	VSS11	Power supply (0V)
79	O	$\overline{RAS}$, $\overline{CE}$	RAS for DRAM/SDRAM, CE for PSRAM
80	O	$\overline{CAS}$, $\overline{OE}$	CAS for SDRAM/OE for PSRAM
81	O	$\overline{CASHH}$, DQMUU, $\overline{WE3}$	Each memory most significant byte select signal
82	O	$\overline{CASHL}$, DQMUL, $\overline{WE2}$	Each memory 2nd significant byte select signal
83	O	$\overline{CASLH}$, DWMLU, $\overline{WE1}$	Each memory 3rd significant byte select signal
84	–	VCC10	Power supply (5V)
85	O	$\overline{CASLL}$, DQMLL, $\overline{WE0}$	Each memory least significant byte select signal
86	–	VSS12	Power supply (0V)
87	O	$\overline{RD}$	Read pulse
88	O	CKE	SDRAM clock enable control
89	I	$\overline{WAIT}$	Hardware wait request
90	O	$\overline{BEN}$	Reserve
91	–	VSS13	Power supply (0V)
92	I	$\overline{BACK}$, $\overline{BRLS}$	Bus right permission in slave mode/Bus right acknowledge in master mode.
93	O	$\overline{BREQ}$, $\overline{BGR}$	Bus right request in slave mode/Bus right acknowledge in master mode
94	O	$\overline{WDTOVF}$	Watch dog timer output
95	O	FTOB	Free-running timer output B
96	–	VCC11	Power supply (5V)
97	O	FTOA	Free-running timer output A
98	–	VSS14	Power supply (0V)
99	I	FTI	Free-running timer input
100	I	FTCI	Free-running timer clock input
101	I	RXD	Serial data input
102	O	TXD	Serial data output
103	I/O	SCK	Serial clock input/output

No.	I/O	Pin Name	Function
104	–	VCC(PLL)12	Power supply (5V) of built-in PLL
105	I	MD0	Operation mode pin
106	–	VSS(PLL)15	Power supply (0V) of built-in PLL
107	I	MD1	Operation mode pin
108	O	CAP1	External capacitor connection pin for PLL
109		CAP2	
110	I	MD2	Operation mode pin
111	O	$\overline{\text{CKPACKN}}$	Clock pause acknowledge output
112	I	$\overline{\text{CKPREQN}}$	Clock pause request input
113	–	VCC13	Power supply (5V)
114	–	N.C	Not connected.
115	–	VSS16	Power supply (0V)
116	–	N.C	Not connected.
117	I	MD3	Operation mode pin
118	I/O	CKIO	System clock input/output
119	I	MD4	Operation mode pin
120		MD5	
121	–	VSS17	Power supply (0V)
122	I	$\overline{\text{RES}}$	Reset
123	–	VCC14	Power supply (5V)
124	O	$\overline{\text{IVECF}}$	Interrupt vector fetch cycle
125	I	$\overline{\text{NMI}}$	Non-maskable interrupt request
126	I	$\overline{\text{IRL3}}$	External interruput factor input
127		$\overline{\text{IRL2}}$	
128		$\overline{\text{IRL1}}$	
129		$\overline{\text{IRL0}}$	
130	I/O	D0	Data bus
131		D1	
132	–	VCC15	Power supply (5V)
133	I/O	D2	Data bus
134	–	VSS18	Power supply (0V)
135	I/O	D3	Data bus
136		D4	
137		D5	
138		D6	
139	–	VCC16	Power supply (5V)
140	I/O	D7	Data bus
141	–	VSS19	Power supply (0V)
142	I/O	D8	Data bus
143		D9	
144		D10	

■ Block Diagram

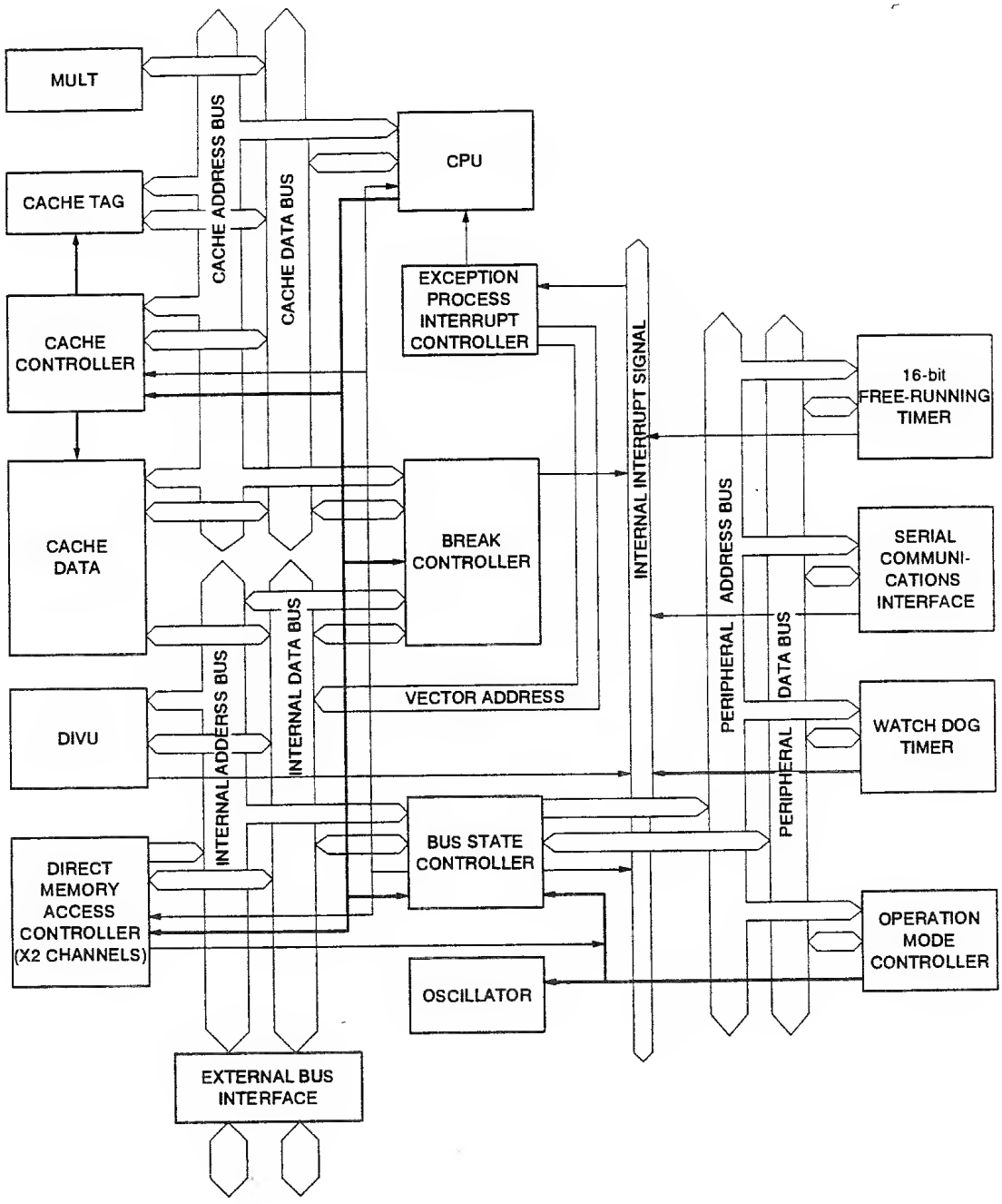

IC3/4/11 4-Mbit SDRAM

IC HM5241605TT-17 TSOP
Parts No. : 315-0928-17

IC UPD4504161G5-A12 TSOP
Parts No. : 315-1022-12

IC HM5241605TT-15 TSOP
Parts No. : 315-0928-15

■ Top View & Pin Layout

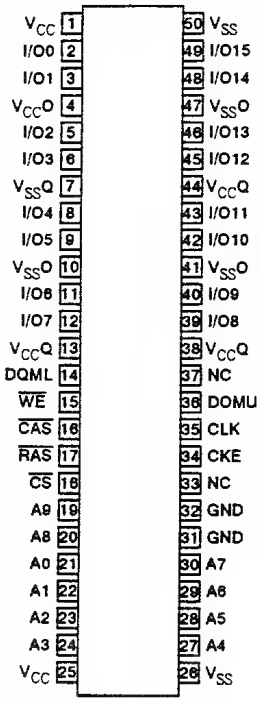

■ Pin Name

Pin Name	Function
A0~A9	Address inputs Row addresses A0-A8 Column addresses A0-A7 Bank select address A9
I/O0~I/O15	Data inputs/outputs
$\overline{CS}$	Chip select
$\overline{RAS}$	Row address strobe command
$\overline{CAS}$	Column address strobe command
$\overline{WE}$	Write enable
DQMU	High-order byte input/output mask
DQML	Low-order byte input/output mask
CLK	Clock input
CKE	Clock enable
V_{CC}	Power supply
V_{SS}	Ground
$V_{CC}Q$	Power supply of I/O pins
$V_{SS}Q$	Ground of I/O pins
NC	Not connected

■ Block Diagram

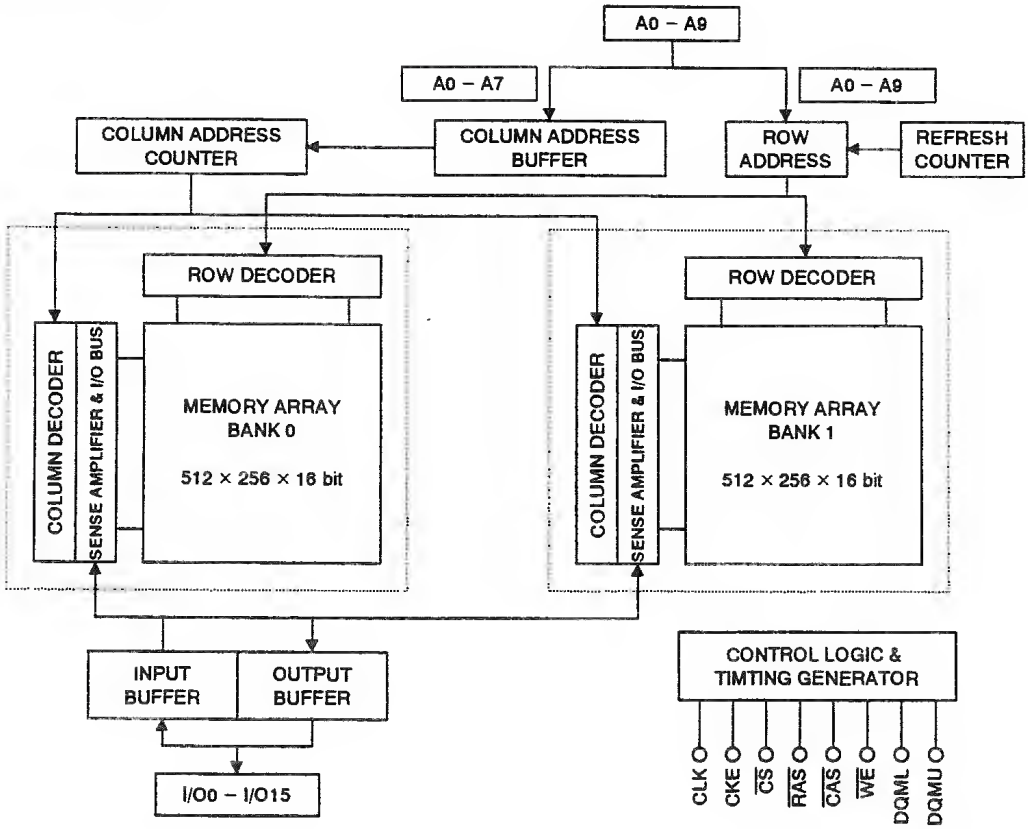

IC5 SCU (Custom Gate Array)

IC CUSTOM CHIP SCU QFP

Parts No. : 315-5688

■ Top View

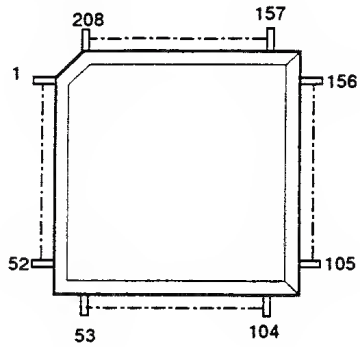

■ Block Diagram

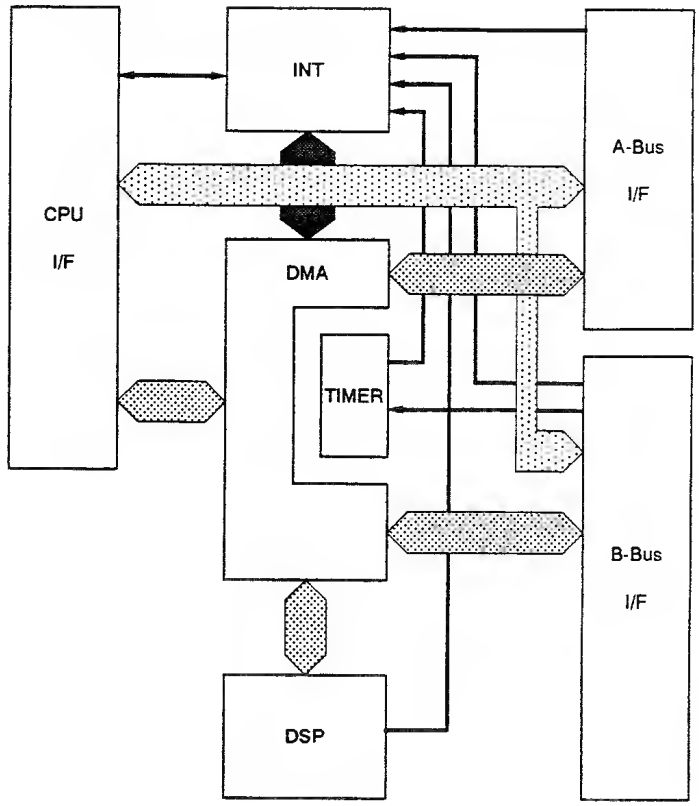

■ Description

No.	I/O	Name	Function
1	–	VSS	GND
2	I/O	AD4	A-bus data bit 4
3	I/O	AD5	A-bus data bit 5
4	I/O	AD6	A-bus data bit 6
5	I/O	AD7	A-bus data bit 7
6	I/O	AD8	A-bus data bit 8
7	I/O	AD9	A-bus data bit 9
8	I/O	AD10	A-bus data bit 10
9	–	VDD	Power supply +5V
10	I/O	AD11	A-bus data bit11
11	–	VSS	GND
12	I/O	AD12	A-bus data bit 12
13	I/O	AD13	A-bus data bit 13
14	I/O	AD14	A-bus data bit 14
15	I/O	AD15	A-bus data bit 15
16	O	AA0	A-bus address bit 0
17	O	AA1	A-bus address bit 1
18	O	AA2	A-bus address bit 2
19	–	VSS	GND
20	O	AA3	A-bus address bit 3
21	–	VDD	Power supply +5V
22	O	AA4	A-bus address bit 4

No.	I/O	Pin Name	Function
23	O	AA5	A-bus address bit 5
24	O	AA6	A-bus address bit 6
25	O	AA7	A-bus address bit 7
26	O	AA8	A-bus address bit 8
27	–	VSS	GND
28	O	AA9	A-bus address bit 9
29	O	AA10	A-bus address bit 10
30	O	AA11	A-bus address bit 11
31	–	VDD	Power supply +5V
32	O	AA12	A-bus address bit 12
33	O	AA13	A-bus address bit 13
34	O	AA14	A-bus address bit 14
35	–	VSS	GND
36	O	AA15	A-bus address bit 15
37	O	AA16	A-bus address bit 16
38	O	AA17	A-bus address bit 17
39	O	AA18	A-bus address bit 18
40	O	AA19	A-bus address bit 19
41	–	VDD	Power supply +5V
42	O	AA20	A-bus address bit 20
43	–	VSS	GND
44	O	AA21	A-bus address bit 21
45	O	AA22	A-bus address bit 22
46	O	AA23	A-bus address bit 23
47	O	AA24	A-bus address bit 24
48	O	AFC0	A-bus function code bit 0
49	O	AFC1	A-bus function code bit 1
50	O	$\overline{AAS}$	A-bus address strobe
51	O	$\overline{ACS0}$	A-bus chip select 0
52	–	VSS	GND
53	O	$\overline{ACS1}$	A-bus chip select 1
54	O	$\overline{ACS2}$	A-bus chip select 2
55	–	VDD	Power supply +5V
56	I	$\overline{AWAIT}$	A-bus external wait
57	I	$\overline{AIRQ}$	A-bus external interrupt factor
58	I	$\overline{TEST}$	Test mode selection (normally, input "H")
59	O	$\overline{ARD}$	A-bus read pulse
60	O	$\overline{AWRU}$	A-bus byte 0 (AD15~8) write pulse
61	O	$\overline{AWRL}$	A-bus byte 1 (AD7~0) write pulse
62	–	VSS	GND
63	O	$\overline{ATIM0}$	A-bus external access timing 0
64	O	$\overline{ATIM1}$	A-bus external access timing 1
65	O	$\overline{ATIM2}$	A-bus external access timing 2
66	I/O	BD0	B-bus address/data bit 0
67	I/O	BD1	B-bus address/data bit 1
68	I/O	BD2	B-bus address/data bit 2
69	–	VDD	Power supply +5V
70	I/O	BD3	B-bus address/data bit 3
71	–	VSS	GND
72	I/O	BD4	B-bus address/data bit 4
73	I/O	BD5	B-bus address/data bit 5
74	I/O	BD6	B-bus address/data bit 6
75	I/O	BD7	B-bus address/data bit 7
76	I/O	BD8	B-bus address/data bit 8
77	I/O	BD9	B-bus address/data bit 9
78	I/O	BD10	B-bus address/data bit 10
79	–	VDD	Power supply +5V
80	I/O	BD11	B-bus address/data bit 11
81	–	VSS	GND
82	I/O	BD12	B-bus address/data bit 12
83	I/O	BD13	B-bus address/data bit 13
84	I/O	BD14	B-bus address/data bit 14

No.	I/O	Pin Name	Function
85	I/O	BD15	B-bus address/data bit 15
86	I	$\overline{IRQL}$	Light pen interrupt
87	I	$\overline{IRQV}$	VDP2•V blank interrupt
88	I	$\overline{IRQH}$	VDP2•H blank interrupt
89	I	$\overline{BRDY2}$	VDP2 data ready
90	O	$\overline{BCS2}$	VDP2 chip select
91	O	$\overline{BADDT}$	B-bus address/data switching signal
92	–	VSS	GND
93	O	$\overline{BDTEN}$	B-bus data enable
94	–	VDD	+5V Power supply
95	O	$\overline{BCSS}$	SCSP chip select
96	I	$\overline{BRDYS}$	SCSP data ready
97	I	$\overline{IRQS}$	SCSP interrupt
98	O	$\overline{BCS1}$	VDP1 chip select
99	I	$\overline{BRDY1}$	VDP1data ready
100	I	$\overline{IRQ1}$	VDP1 interrupt
101	I/O	CA0	C-bus address bit 0
102	I/O	CA1	C-bus address bit 1
103	I/O	CA2	C-bus address bit 2
104	–	VSS	GND
105	–	VDD	+5V Power supply
106	I/O	CA3	C-bus address bit 3
107	I/O	CA4	C-bus address bit 4
108	I/O	CA5	C-bus address bit 5
109	I/O	CA6	C-bus address bit 6
110	–	VSS	GND
111	I/O	CA7	C-bus address bit 7
112	I/O	CA8	C-bus address bit 8
113	I/O	CA9	C-bus address bit 9
114	I/O	CA10	C-bus address bit 10
115	–	VSS	GND
116	I/O	CA11	C-bus address bit 11
117	–	VDD	+5V Power supply
118	I/O	CA12	C-bus address bit 12
119	I/O	CA13	C-bus address bit 13
120	I/O	CA14	C-bus address bit 14
121	–	VSS	GND
122	I/O	CA15	C-bus address bit 15
123	I/O	CA16	C-bus address bit 16
124	I/O	CA17	C-bus address bit 17
125	I/O	CA18	C-bus address bit 18
126	I/O	CA19	C-bus address bit 19
127	–	VDD	+5V Power supply
128	I/O	CA20	C-bus address bit 20
129	–	VSS	GND
130	I/O	CA21	C-bus address bit 21
131	I/O	CA22	C-bus address bit 22
132	I/O	CA23	C-bus address bit 23
133	I/O	CA23	C-bus address bit 24
134	I/O	CD0	C-bus data bit 0
135	I/O	CD1	C-bus data bit 1
136	I/O	CD2	C-bus data bit 2
137	–	VSS	GND
138	I/O	CD3	C-bus data bit 3
139	–	VDD	+5V Power supply
140	I/O	CD4	C-bus data bit 4
141	I/O	CD5	C-bus data bit 5
142	I/O	CD6	C-bus data bit 6
143	I/O	CD7	C-bus data bit 7
144	–	VSS	GND
145	I/O	CD8	C-bus data bit 8
146	I/O	CD9	C-bus data bit 9

No.	I/O	Pin Name	Function
147	I/O	CD10	C-bus data bit 10
148	I/O	CD11	C-bus data bit 11
149	–	VDD	+5V Power supply
150	I/O	CD12	C-bus data bit 12
151	–	VSS	GND
152	I/O	CD13	C-bus data bit 13
153	I/O	CD14	C-bus data bit 14
154	I/O	CD15	C-bus data bit 15
155	I/O	CD16	C-bus data bit 16
156	I/O	CD17	C-bus data bit 17
157	–	VSS	GND
158	I/O	CD18	C-bus data bit 18
159	I/O	CD19	C-bus data bit 19
160	–	VDD	+5V Power supply
161	I/O	CD20	C-bus data bit 20
162	I/O	CD21	C-bus data bit 21
163	I/O	CD22	C-bus data bit 22
164	–	VSS	GND
165	I/O	CD23	C-bus data bit 23
166	I/O	CD24	C-bus data bit 24
167	I/O	CD25	C-bus data bit 25
168	I/O	CD26	C-bus data bit 26
169	I/O	CD27	C-bus data bit 27
170	–	VDD	+5V Power supply
171	I/O	CD28	C-bus data bit 28
172	–	VSS	GND
173	I/O	CD29	C-bus data bit 29
174	I/O	CD30	C-bus data bit 30
175	I/O	CD31	C-bus data bit 31
176	I	$\overline{CCS1}$	C-bus chip select 1
177	I	$\overline{CCS2}$	C-bus chip select 2
178	O	$\overline{CCS3}$	C-bus chip select 3
179	–	VSS	GND
180	I	$\overline{RESET}$	Initial reset
181	I	CLK28	System clock
182	I/O	CRDWR	C-bus read/write
183	I	$\overline{CRD}$	C-bus read pulse
184	–	VDD	+5V Power supply
185	I/O	$\overline{CDQMUU}$	SDRAM byte 0 (CD31-24) write pulse
186	I/O	$\overline{CDQMUL}$	SDRAM byte 1 (CD23-16) write pulse
187	I/O	$\overline{CDQMLU}$	SDRAM byte 2 (CD15-8) write pulse
188	I/O	$\overline{CDQMLL}$	SDRAM byte 3 (CD7-0) write pulse
189	–	VSS	GND
190	O	$\overline{RAS}$	SDRAM RAS
191	O	$\overline{CAS}$	SDRAM CAS
192	O	$\overline{CWAIT}$	C-bus external wait
193	–	VDD	+5V Power supply
194	I	$\overline{CIVECF}$	C-bus interrupt vector fetch sycle
195	O	$\overline{CIRL0}$	C-bus external interrupt factor 0
196	O	$\overline{CIRL1}$	C-bus external interrupt factor 1
197	O	$\overline{CIRL2}$	C-bus external interrupt factor 2
198	O	$\overline{CIRL3}$	C-bus external interrupt factor 3
199	–	VSS	GND
200	O	$\overline{CBREQ}$	C-bus right request
201	I	$\overline{CBACK}$	C-bus right acknowledge
202	I	$\overline{MIREQ}$	System manager interrupt
203	O	AA25	A-bus address bit 25
204	I/O	AD0	A-bus data bit 0
205	I/O	AD1	A-bus data bit 1
206	I/O	AD2	A-bus data bit 2
207	I/O	AD3	A-bus data bit 3
208	–	VDD	+5V Power supply

IC6 DCC

IC CUSTOM CHIP DCC QFP

Parts No. : 315-5778

■ Top View

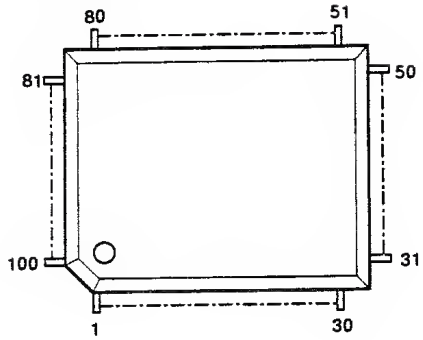

■ Pin Name

No.	I/O	Name
1	I	TEST1
2	O	TEST0
3	O	BEN
4	O	BDIR
5	–	VSS
6	O	DA0
7	O	DA1
8	O	DA2
9	O	DA3
10	O	DA4
11	O	DA5
12	O	DA6
13	O	DA7
14	O	DA8
15	–	VSS
16	–	VDD
17	O	$\overline{\text{DRAS0}}$
18	O	$\overline{\text{DRAS1}}$
19	O	$\overline{\text{DRAS2}}$
20	O	$\overline{\text{DRAS3}}$
21	O	$\overline{\text{DUCAS}}$
22	O	$\overline{\text{DLCAS}}$
23	O	$\overline{\text{DWE}}$
24	O	$\overline{\text{DOE}}$
25	–	VSS
26	–	VDD
27	I	A1
28	I	A2
29	I	A3
30	I	A4
31	I	A5
32	I	A6
33	I	A7
34	I	A8

No.	I/O	Name
35	I	A9
36	I	A10
37	I	A11
38	I	A12
39	I	A13
40	–	VSS
41	–	VDD
42	I	A14
43	I	A15
44	I	A16
45	I	A17
46	I	A18
47	I	A19
48	I	A20
49	I	A21
50	I	A22
51	I	A23
52	I	A24
53	–	VSS
54	O	$\overline{\text{IREQ1}}$
55	O	$\overline{\text{IREQ2}}$
56	–	VDD
57	I	$\overline{\text{IVECF}}$
58	I	RD/$\overline{\text{WR}}$
59	I	$\overline{\text{RD}}$
60	–	VSS
61	I	$\overline{\text{CS2}}$
62	I	$\overline{\text{CS1}}$
63	I	$\overline{\text{CS0}}$
64	O	$\overline{\text{WAIT}}$
65	–	VDD
66	–	VSS
67	I	$\overline{\text{WTIN}}$
68	I	WE1

No.	I/O	Name
69	I	WE0
70	–	VSS
71	O	$\overline{\text{BACK}}$
72	O	$\overline{\text{EXBACK}}$
73	O	$\overline{\text{BRLS}}$
74	–	VSS
75	I	$\overline{\text{BGR}}$
76	I	$\overline{\text{BREQ}}$
77	I	$\overline{\text{EXBREQ}}$
78	O	MFT1
79	O	SFT1
80	–	VDD
81	I	CK
82	–	VSS
83	I	$\overline{\text{RESET}}$
84	I	BS
85	I	$\overline{\text{EWT}}$
86	O	$\overline{\text{IOCE}}$
87	O	$\overline{\text{EXTCE0}}$
88	O	$\overline{\text{EXTCE1}}$
89	O	$\overline{\text{EXTCE2}}$
90	–	VSS
91	–	VDD
92	I	$\overline{\text{HINT}}$
93	I	$\overline{\text{VINT}}$
94	I	$\overline{\text{DECON}}$
95	O	$\overline{\text{ROMCE}}$
96	O	$\overline{\text{SMPCCE}}$
97	O	$\overline{\text{SRAMCE}}$
98	O	$\overline{\text{MOE}}$
99	O	$\overline{\text{MWR}}$
100	–	VSS

IC7 IPL ROM

OS SATURN IPL-ROM PAL DIP

Parts No. : EPR-17933

Parts No. : MPR-17933

■ Top View & Pin Layout

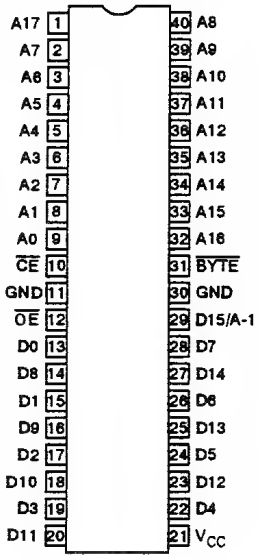

■ Pin Name

A0-A17	Address inputs
$\overline{CE}$	Chip enable
$\overline{OE}$	Output enable
GND	Ground
$\overline{BYTE}$	
D0-D15	Data inputs/outputs
V_{CC}	+5V power supply

IC8 BACKUP RAM

IC CXK58267AM-10L SOP
Parts No. : 315-0948-10

IC UPD43257B-10LL SOP
Parts No. : 315-0930-10

IC M5M5255BFP-12LL SOP
Parts No. : 315-0964-10

IC SRM20257LLM10 SOP
Parts No. : 315-0965-10

IC UM62257M-70LL SOP
Parts No. : 315-1002-70

■ Block Diagram

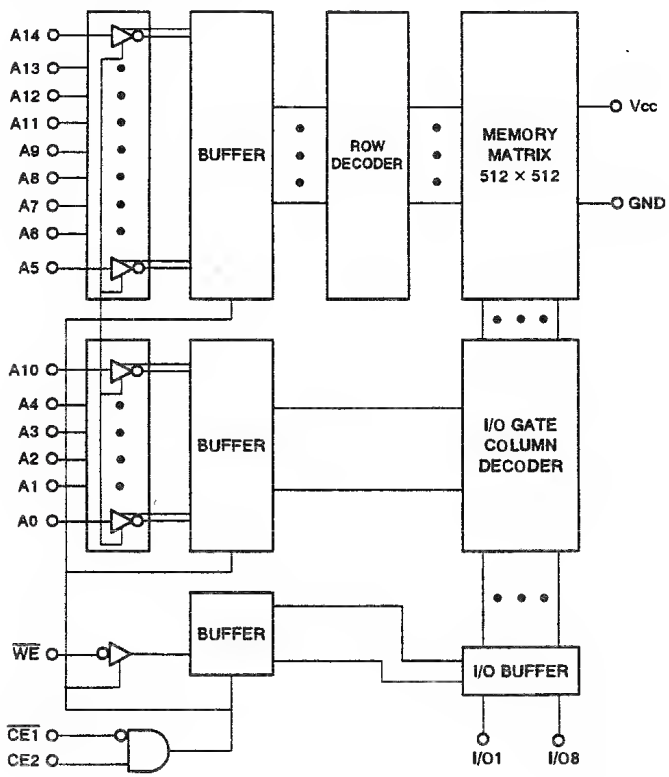

■ Top View & Pin Layout

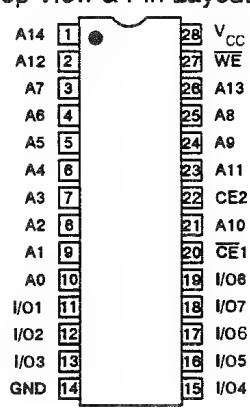

■ Description

Name	Function
A0-A14	Address inputs
I/O1-I/O8	Data inputs/outputs
$\overline{CE1}$, CE2	Chip enable inputs
$\overline{WE}$	Write enable input
V_{CC}	+5V power supply
GND	Ground

IC9 SMPC

IC CUSTOM CHIP SMPC QFP

Parts No. : 315-5744

■ Top View

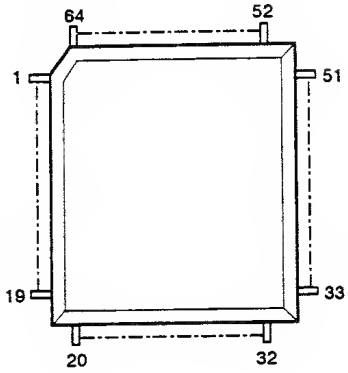

■ Description

No.	I/O	Name	Function
1	–	R70	Not connected.
2		R71	
3	I/O	R72	Reset control
4		R73	
5	I	R50	Jumper configuration input
6		R51	
7		R52	
8		R53	
9	–	TEST	Not connected → GND
10	I/O	OSC1	Clock 3
11		OSC2	
12	–	GND	Ground
13	I/O	X2	Clock 4
14		XI	
15		$\overline{\text{RESET}}$	Master reset input
16	–	VCC	Power
17	I	$\overline{\text{CS}}$	Chip select input
18	I	R/$\overline{\text{W}}$	Read/$\overline{\text{write}}$ input
19	I/O	A1	Address bus
20		A2	
21		A3	
22		A4	
23		A5	
24		A6	
25	I/O	DB0	Data bus
26		DB1	
27		DB2	
28		DB3	
29		DB4	
30		DB5	
31		DB6	
32		DB7	

No.	I/O	Name	Function
33	I/O	PIO0A	Control pad
34		PIO1A	
35		PIO2A	
36		PIO3A	
37		PIO4A	
38		PIO5A	
39		PIO6A	
40	I/O	PIO0B	Control pad
41		PIO1B	
42		PIO2B	
43		PIO3B	
44		PIO4B	
45		PIO5B	
46		PIO6B	
47	I	EXL	Input
48	I	INT0/D13	Input
49		INT2/ROI	Backup RAM reset control
50	I/O	D0	Reset control
51		DI	
52	–	D2	Not connected.
53	I/O	D3	Reset control
54		D4	
55		D5	
56		D6	
57		D7	
58		D8	
59		D9	
60		D10	
61	I/O	R60	Reset control
62		R61	
63	–	R62	Not connected.
64		R63	

IC10 VDP1

IC CUSTOM CHIP VDP1 QFP
Parts No. : 315-5689

IC CUSTOM CHIP VDP1 S QFP
Parts No. : 315-5883

■ Top View

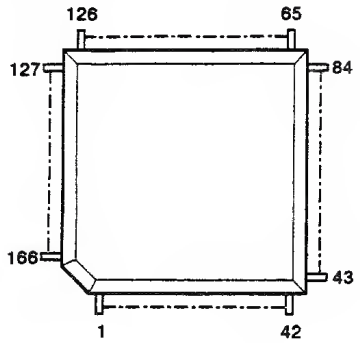

■ Description

No.	I/O	Name	Function
1	–	NC	Not connected.
2	O	VRAMA7	Address bus (VRAM)
3		VRAMA8	
4		VRAMA9	
5	–	VSS	Ground for I/O pin
6	O	VCLK	Clock (VRAM)
7	O	$\overline{\text{VUDQM}}$	Upper byte input/output mask(VRAM)
8	O	$\overline{\text{VLDQM}}$	Lowerbyte input/output mask(VRAM)
9	–	VSS	Ground for internal circuit
10	O	$\overline{\text{VCASN}}$	Column address asserted (VRAM)
11	O	$\overline{\text{VRASN}}$	Row address asserted (VRAM)
12	–	VCC	Power supply
13	O	$\overline{\text{VWEN}}$	Write enable (VRAM)
14	O	$\overline{\text{VCSN}}$	Chip select (VRAM)
15	I	MCLK	Master clock
16	–	$\overline{\text{RESETN}}$	Reset
17	–	VSS	Ground for I/O pin
18	–	$\overline{\text{CSN}}$	Chip select
19	–	$\overline{\text{ADN}}$	Address/data select
20	–	$\overline{\text{DTEN}}$	Data enable
21	O	$\overline{\text{IRON}}$	Interrupt request
22	O	$\overline{\text{READYN}}$	Ready
23	O	VBUS0	Address/data bus (Syscon)
24		VBUS1	
25		VBUS2	
26	–	VSS	Ground for I/O pin
27	O	VBUS3	Address/data bus (Syscon)
28		VBUS4	
29		VBUS5	
30		VBUS6	
31		VBUS7	
32	–	VCC	Power supply
33	O	VBUS8	Address/data bus (Syscon)
34		VBUS9	
35		VBUS10	
36		VBUS11	
37	–	VSS	Ground for internal circuit
38	O	VBUS12	Address/data bus (Syscon)
39		VBUS13	
40		VBUS14	

No.	I/O	Name	Function
41	O	VBUS15	Address/data bus (Syscon)
42	–	NC	Not connected.
43		NC	
44	O	FOA0	Address bus (FB0)
45		FOA1	
46		FOA2	
47	–	VSS	Ground for I/O pin
48	O	FOA3	Address bus (FB0)
49	O	FOA4	Address bus
50	O	FOA5	Frame buffer (FB0)
51	O	FOA6	Address bus (FB0)
52	–	VCC	Power supply
53	O	FOA7	Address bus (FB0)
54		FOA8	
55		FOA9	
56	O	$\overline{\text{FOCSN}}$	Chip select (FB0)
57	–	VSS	Ground for internal circuit
58	O	$\overline{\text{FOWEN}}$	Write enable (FB0)
59	O	$\overline{\text{FOCLK}}$	Clock (FB0)
60	O	$\overline{\text{FRRASN}}$	Row address asserted (FB0)
61	O	$\overline{\text{FOCASN}}$	Column address asserted (FB0)
62	O	$\overline{\text{FOLDQM}}$	Lower byte input/output mask (FB0)
63	O	$\overline{\text{FOUDQM}}$	Upper byte input?output mask (FB0)
64	–	VSS	Groun for I/O pin
65	O	F0D0	Data bus (FB0)
66		F0D1	
67		F0D2	
68		F0D3	
69		F0D4	
70	–	VSS	Ground for internal circuit
71	O	F0D5	Data bus (FB0)
72		F0D6	
73		F0D7	
74		F0D8	
75	–	VCC	Power supply
76	O	F0D9	Data bus (FB0)
77		F0D10	
78		F0D11	
79		F0D12	
80	–	VSS	Ground for I/O pin
81	O	F0D13	Data bus (FB0)
82		F0D14	
83		F0D15	
84	–	NC	Not connected.
85		NC	
86	O	F1D0	Data bus (FB1)
87		F1D1	
88		F1D2	
89	–	VSS	Ground for I/O pin
90	O	F1D3	Data bus (FB1)
91		F1D4	
92		F1D5	
93		F1D6	
94	–	VCC	Power supply
95	O	F1D7	Data bus (FB1)
96		F1D8	
97		F1D9	
98		F1D10	
99	–	VSS	Ground for internal circuit
100	O	F1D11	Data bus (FB1)
101		F1D12	
102		F1D13	
103		F1D14	
104		F1D15	

No.	I/O	Name	Function
105	–	VSS	Ground for I/O pin
106	O	F1CLK	Clock (FB1)
107	O	$\overline{\text{F1CSN}}$	Chip select (FB1)
108	O	$\overline{\text{F1WEN}}$	Write enable (FB1)
109	O	$\overline{\text{F1RASN}}$	Row address asserted (FB1)
110	O	$\overline{\text{F1CASN}}$	Column address asserted (FB1)
111	O	$\overline{\text{F1LDQM}}$	Lower byte input/output mask (FB1)
112	–	VSS	Data bus (FB1)
113	O	$\overline{\text{F1UDQM}}$	Lower byte input/output mask (FB1)
114	O	F1A0	Address bus (FB1)
115		F1A1	
116		F1A2	
117	–	VCC	Power supply
118	O	F1A3	Address bus (FB1)
119		F1A4	
120		F1A5	
121	O	F1A6	Address bus (FB1)
122	–	VSS	Ground for I/O pin
123	O	F1A7	Address bus (BF1)
124	O	F1A8	
125	O	F1A9	
126	–	NC	Not connected.
127			
128	–	$\overline{\text{HT1MN}}$	Horizontal sync timing
129	–	$\overline{\text{VT1MN}}$	Vertical sync timing
130	O	V2CLK	Video clock (1/2 MCLK)
131	–	VSS	Ground for I/O pin
132	O	VOUT0	Display start address/video data
133	O	VOUT1	
134	O	VOUT2	
135	O	VOUT3	
136	–	VCC	Power supply
137	O	VOUT4	Display start address/video output data
138	O	VOUT5	Video output data
139	O	VOUT6	
140	O	VOUT7	
141	–	VSS	Ground for internal circuit
142	O	VRAMD0	VRAM data bus
143	O	VRAMD1	
144	O	VRAMD2	
145	O	VRAMD3	
146	O	VRAMD4	
147	–	VSS	Ground for I/O pin
148	O	VRAMD5	VRAM data bus
149	O	VRAMD6	
150	O	VRAMD7	
151	O	VRAMD8	
152	O	VRAMD9	
153	O	VRAMD10	
154	–	VSS	Ground for internal circuit
155	O	VRAMD11	VRAM data bus
156	O	VRAMD12	
157	O	VRAMD13	
158	O	VRAMD14	
159	–	VCC	Power supply
160	O	VRAMD15	VRAM data bus
161	O	VRAMA0	VRAM address bus
162	O	VRAMA1	
163	O	VRAMA2	
164	O	VRAMA3	
165	O	VRAMA4	
166	O	VRAMA5	
167	O	VRAMA6	
168	–	NC	Not connected.

IC12/13/15/16

IC UPD4502161G5-A12 TSOP NEC
Parts No. : 315-0910-12

IC HM5221605TT-17 TSOP HITACHI
Parts No. : 315-1017-17

IC LC382161T-17 TSOP SANYO
Parts No. :315-1012-17

■ Top View & Pin Layout

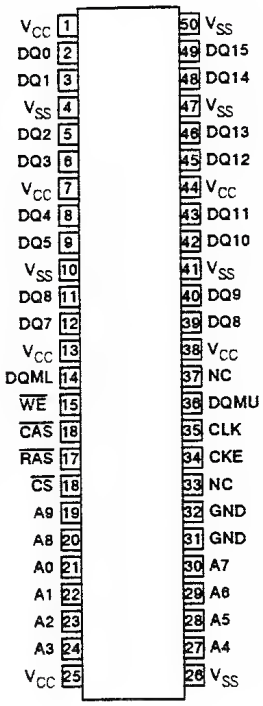

■ Pin Name

A0-A9	Address inputs
DQ0-DQ5	Data inputs/outputs
CLK	System clock input
CKE	Clock enable
$\overline{CS}$	Chip select
$\overline{RAS}$	Row address strobe command
$\overline{CAS}$	Col / address strobe command
$\overline{WE}$	Writre enable
DQML, DQMU	DQ mask enable
V_{CC}	Supply voltage
V_{SS}, GND	Ground
NC	No connection

■ Description

No.	I/O	Pin Name	Function
1, 7, 13, 25, 38, 44, 50	–	VCC	Power supply of internal circuits.
4, 10, 26, 41, 47, 50	–	VSS	Ground pins.
2, 3, 5, 6, 8, 9, 11, 12, 39, 40, 42, 43, 45, 46, 48, 49	I/O	DQ1-DQ16	I/O pins are the same as conventional DRAM.
14, 36	1	DQML, DQMU	DQMU controls upper byte and DQML controls lower byte input/output buffers. In read mode, DQMU, DQML control output buffer impedance like conventional $\overline{OE}$. If DQMU, DQML is high, output buffers become high impedance. If DQMU, DQML is low, output buffers become low imedance. If DQMU, DQML is low, output buffers become low impedance. And when device in write mode, DQMU, DQML control word mask. If DQMU, DQML is high input data is not written to memory cell. If DQMU, DQML is low input data is written to memory cell.
15, 16, 17	1	$\overline{WE}$ $\overline{CAS}$ $\overline{RAS}$	$\overline{WE}$ $\overline{CAS}$ $\overline{RAS}$ have the same names with conventional DRAM. But these pins have different definitions with conventional ones. All of these pins only define command cycle definition. For detail information see command table.
18	1	$\overline{CS}$	$\overline{CS}$ low start the command input cycle. When $\overline{CS}$ is high, all input are not referenced. But even if $\overline{CS}$ is high, internal operations i.e. bank active or burst are not changed.
19	1	A9	A9 is bank select signal (BS). In command cycle, A9=low select bank A and A9=high select bank B.

No.	I/O	Pin Name	Function
20, 21-24, 27-30	I	A0-A8	Row address (AX0-AX6, AX8) is determined by A0-A8 level at the bank active command cycle CLK rising edge. (AX7 is don't care.) Column address (AY0-AY7) is determined by A0-A7 level at read or write command cycle CLK rising edge. And this column address become burst access start address. A8 define precharge mode command cycle, both banks are prechareged. But A8=low in when A8=high in precharge command cycle, only one bank that is selected A9 (BS) is precharged. And when A8=high in read or write command cycle, the precharge cycle start automatically after the last data in burst accessing.
31, 32	–	GND	Ground
33, 37	–	NC	Not connected.
34	I	CKE	CKE determine next CLK is valid or not. If CKE is high next CLK rising edge is valid. But if CKE is low, next CLK is invalid. If CLK rising edge is invalid, internal clock is not asserted and μ PD4504161 becomes halt operation. And when μ PD4502161 does not in burst mode and CKE is negated, μ PD4502161 enter power down mode. During power down mode CKE must keep low level.
35	I	CLK	CLK is the master clock input pin. The other inputs signals are referenced at CLK rising edge.

IC14 VDP2

IC CUSTOM CHIP VDP2 QFP YAMAHA
Parts No. : 315-5690

IC CUSTOM CHIP VDP2 QFP HH
Parts No. : 315-5690-02

IC CUSTOM CP VDP2 S QFP YAMAHA
Parts No. : 315-5890

Top View

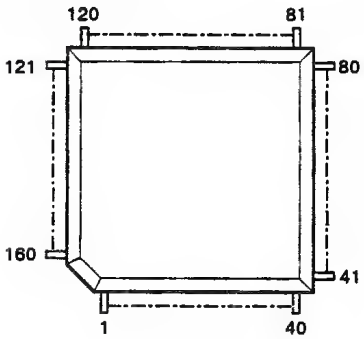

Block Diagram

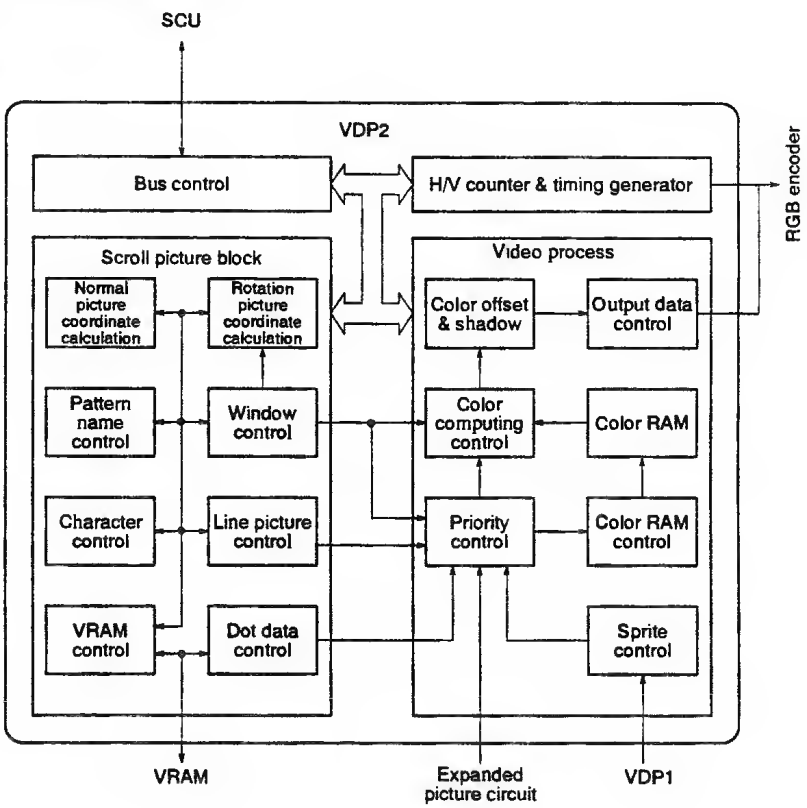

No.	I/O	Pin Name	Function
1	O	$\overline{RBCS}$	VRAM-B chip select
2	O	$\overline{RBRAS}$	VRAM-B row address strobe
3	O	$\overline{RBCAS}$	VRAM-B column address strobe
4	O	$\overline{RBWE}$	VRAM-B write enable
5	–	VSS	GND
6	O	RBLDM	VRAM-B DQ low-order mask enable
7	O	RBUDM	VRAM-B DQ high-order mask enable
8	O	RBA0	VRAM-B address bit 0
9	O	RBA1	VRAM-B address bit 1
10	–	VDD	+5V power supply
11	O	RBA2	VRAM-B address bit 2
12	O	RBA3	VRAM-B address bit 3
13	O	RBA4	VRAM-B address bit 4
14	O	RBA5	VRAM-B address bit 5
15	–	VSS	GND
16	O	RBA6	VRAM-B address bit 6
17	O	RBA7	VRAM-B address bit 7
18	O	RBA8	VRAM-B address bit 8
19	O	RBA9	VRAM-B address bit 9
20	I/O	VD0	SYSCON interface data bit 0
21	I/O	VD1	SYSCON interface data bit 1
22	I/O	VD2	SYSCON interface data bit 2
23	I/O	VD3	SYSCON interface data bit 3
24	–	VSS	GND
25	I/O	VD4	SYSCON interface data bit 4
26	I/O	VD5	SYSCON interface data bit 5
27	I/O	VD6	SYSCON interface data bit 6
28	I/O	VD7	SYSCON interface data bit 7
29	–	VDD	+5V power supply
30	I/O	VD8	SYSCON interface data bit 8
31	I/O	VD9	SYSCON interface data bit 9
32	I/O	VD10	SYSCON interface data bit 10
33	I/O	VD11	SYSCON interface data bit 11
34	I/O	VD12	SYSCON interface data bit 12
35	I/O	VD13	SYSCON interface data bit 13
36	–	VSS	GND
37	I/O	VD14	SYSCON interface data bit 14
38	I/O	VD15	SYSCON interface data bit 15
39	I	$\overline{AD}$	SYSCON interface address/data selection
40	I	$\overline{DTEN}$	SYSCON interface data enable
41	O	$\overline{READY}$	SYSCON interface data ready
42	I	$\overline{CS}$	SYSCON interface chip select
43	–	VDD	+5V power supply
44	O	$\overline{VINT}$	SYSCON interface vertical interrupt
45	O	$\overline{HINT}$	SYSCON interface horizontal interrupt
46	I	$\overline{EXLAT}$	External latch strobe input
47	I	$\overline{EXSYN}$	External sync signal input
48	I/O	EXBG0	External input data bit 0 / Test input/output (in test mode)
49	I/O	EXBG1	External input data bit 1 / Test input/output (in test mode)
50	I/O	EXBG2	External input data bit 2 / Test input/output (in test mode)
51	I/O	EXBG3	External input data bit 3 / Test input/output (in test mode)
52	–	VSS	GND
53	I/O	EXBG4	External input data bit 4 / Test input/output (in test mode)
54	I/O	EXBG5	External input data bit 5 / Test input/output (in test mode)
55	I/O	EXBG6	External input data bit 6 / Test input/output (in test mode)
56	I/O	EXBG7	External input data bit 7 / Test input/output (in test mode)
57	I/O	EXBG8	External input data bit 8 / Test input/output (in test mode)
58	I/O	EXBG9	External input data bit 9 / Test input/output (in test mode)
59	I/O	EXBG10	External input data bit 10 / Test input/output (in test mode)
60	I/O	EXBG11	External input data bit 11 / Test input/output (in test mode)
61	I/O	EXBG12	External input data bit 12 / Test input/output (in test mode)
62	I/O	EXBG13	External input data bit 13 / Test input/output (in test mode)
63	I/O	EXBG14	External input data bit 14 / Test input/output (in test mode)

No.	I/O	Pin Name	Function
64	I/O	EXBG15	External input data bit 15 / Test input/output (in test mode)
65	I/O	EXBG16	External input data bit 16 / Test input/output (in test mode)
66	I/O	EXBG17	External input data bit 17 / Test input/output (in test mode)
67	–	VSS	GND
68	I/O	EXBG18	External input data bit 18 / Test input/output (in test mode)
69	I/O	EXBG19	External input data bit 19 / Test input/output (in test mode)
70	I/O	EXBG20	External input data bit 20 / Test input/output (in test mode)
71	I/O	EXBG21	External input data bit 21 / Test input/output (in test mode)
72	I/O	EXBG22	External input data bit 22 / Test input/output (in test mode)
73	I/O	EXBG23	External input data bit 23 / Test input/output (in test mode)
74	I	EXON	External input data display timing
75	–	VDD	+5V power supply
76	I	CLK	Main clock input
77	O	$\overline{\text{EXSL}}$	External video select signal
78	I	$\overline{\text{RESET}}$	Initial reset input
79	I	NTSC	NTSC/PAL selection
80	–	VSS	GND
81	–	AVSS	GND of linear RGB
82	O	R	Linear R output
83	O	G	Linear G output
84	O	B	Linear B output
85	–	AVDD	+5V power supply of linear RGB
86	O	$\overline{\text{CSYNC}}$	Composite sync signal output
87	O	$\overline{\text{VSYNC}}$	Vertical sync signal output
88	O	$\overline{\text{HSYNC}}$	Horizontal sync signal output
89	–	VDD	+5V power supply
90	O	DCLK	Dot clock output
91	O	$\overline{\text{HTIM}}$	VDP1 interface H timing
92	O	$\overline{\text{VTIM}}$	VDP1 interface V timing
93	I/O	FBD0	VDP1 interface data bit 0
94	I/O	FBD1	VDP1 interface data bit 1
95	I/O	FBD2	VDP1 interface data bit 2
96	I/O	FBD3	VDP1 interface data bit 3
97	–	VSS	GND
98	I/O	FBD4	VDP1 interface data bit 4
99	I/O	FBD5	VDP1 interface data bit 5
100	I/O	FBD6	VDP1 interface data bit 6
101	I/O	FBD7	VDP1 interface data bit 7
102	O	RAA0	VRAM-A address bit 0
103	O	RAA1	VRAM-A address bit 1
104	O	RAA2	VRAM-A address bit 2
105	O	RAA3	VRAM-A address bit 3
106	–	VSS	GND
107	O	RAA4	VRAM-A address bit 4
108	O	RAA5	VRAM-A address bit 5
109	O	RAA6	VRAM-A address bit 6
110	O	RAA7	VRAM-A address bit 7
111	–	VDD	+5V power supply
112	O	RAA8	VRAM-A address bit 8
113	O	RAA9	VRAM-A address bit 9
114	O	$\overline{\text{RACS}}$	VRAM=A chip select
115	O	$\overline{\text{RARAS}}$	VRAM-A row address strobe
116	–	VSS	GND
117	O	$\overline{\text{RACAS}}$	VRAM-A column address strobe
118	O	$\overline{\text{RAWE}}$	VRAM-A write enable
119	O	RALDM	VRAM-A DQ low-order mask enable
120	O	RAUDM	VRAM-A DQ high-order mask enable
121	I/O	RAD0	VRAM-A data bit 0
122	I/O	RAD1	VRAM-A data bit 1
123	I/O	RAD2	VRAM-A data bit 2
124	I/O	RAD3	VRAM-A data bit 3
125	–	VSS	GND
126	I/O	RAD4	VRAM-A data bit 4

No.	I/O	Pin Name	Function
127	I/O	RAD5	VRAM – A data bit 5
128	I/O	RAD6	VRAM – A data bit 6
129	I/O	RAD7	VRAM – A data bit 7
130	–	VDD	+5V power supply
131	I/O	RAD8	VRAM – A data bit 8
132	I/O	RAD9	VRAM – A data bit 9
133	I/O	RAD10	VRAM – A data bit 10
134	I/O	RAD11	VRAM – A data bit 11
135	–	VSS	GND
136	I/O	RAD12	VRAM – A data bit 12
137	I/O	RAD13	VRAM – A data bit 13
138	I/O	RAD14	VRAM – A data bit 14
139	I/O	RAD15	VRAM – A data bit 15
140	O	RCLK	VRAM – A/B clock
141	I	$\overline{\text{TEST}}$	Test mode selection (normally, connected to VDD)
142	I/O	RBD0	VRAM – B data bit 0
143	I/O	RBD1	VRAM – B data bit 1
144	I/O	RBD2	VRAM – B data bit 2
145	I/O	RBD3	VRAM – B data bit 3
146	–	VSS	GND
147	I/O	RBD4	VRAM – B data bit 4
148	I/O	RBD5	VRAM – B data bit 5
149	I/O	RBD6	VRAM – B data bit 6
150	I/O	RBD7	VRAM – B data bit 7
151	–	VDD	+5V power supply
152	I/O	RBD8	VRAM – B data bit 8
153	I/O	RBD9	VRAM – B data bit 9
154	I/O	RBD10	VRAM – B data bit 10
155	I/O	RBD11	VRAM – B data bit 11
156	–	VSS	GND
157	I/O	RBD12	VRAM – B data bit 12
158	I/O	RBD13	VRAM – B data bit 13
159	I/O	RBD14	VRAM – B data bit 14
160	I/O	RBD15	VRAM – B data bit 15

IC17 SCSP

IC CUSTOM CHIP SCSP QFP YAMAHA
Parts No. : 315-5687

■ Top View

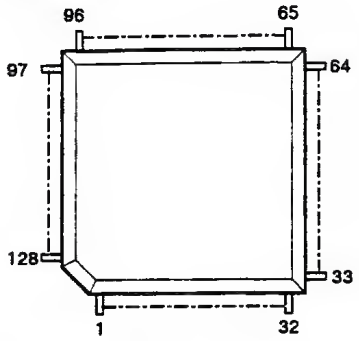

■ Description

No.	I/O	Pin Name	Function
1	I/O	MCD6	MCPU data bus
2		MCD5	
3		MCD4	
4		MCD3	
5	–	VSS	GND
6	I/O	MCD2	MCPU data bus
7		MCDI	
8		MCD0	
9	O	$\overline{\text{MCRDYN}}$	Ready signal to MCPU
10	O	$\overline{\text{MCINTN}}$	Interrupt request to MCPU
11	–	VDD	Power supply (5v)
12	I	$\overline{\text{RESETN}}$	SCSP reset input
13	–	VSS	GND
14	I	MACK	SCSP master clock: 512fs (22.58MHz)
15	I	$\overline{\text{INT2N}}$	SCSP external interrupt request input
16		$\overline{\text{INT1N}}$	
17		$\overline{\text{INT0N}}$	
18	–	VDD	Power supply (5v)
19	I	ESD	Digital audio interface serial data input
20	I	EBCK	Digital audio interface BCK
21	I	ELRCK	Digital audio interface LRCK
22	I	MIDIINP	MIDI input
23	–	VSS	GND
24	O	MIDIOUT	MIDI output
25	O	$\overline{\text{MRASN}}$	RAS signal
26	O	$\overline{\text{MWEUN}}$	Write signal corresponding to MD[15-8]
27	O	$\overline{\text{MWELN}}$	Write signal corresponding to MD[7-0]
28	O	$\overline{\text{MCASON}}$	CAS signal
29		$\overline{\text{MCASIN}}$	
30	O	$\overline{\text{MOEN}}$	Sound memory data output enable
31	–	VDD	Power supply (5v)
32	O	MA0	Sound memory address
33		MAI	
34		MA2	
35		MA3	
36		MA4	
37		MA5	
38	–	VSS	GND
39	O	MA6	Sound memory address
40		MA7	
41		MA8	
42	I/O	MD0	Sound memory data

No.	I/O	Pin Name	Function
43	I/O	MD1	Sound memory data
44		MD2	
45	–	VDD	Power supply (5V)
46	I/O	MD3	Sound memory data
47		MD4	
48		MD5	
49		MD6	
50		MD7	
51		MD8	
52	–	VSS	GND
53	I/O	MD9	Sound memory data
54		MD10	
55		MD11	
56		MD12	
57		MD13	
58		MD14	
59	–	VDD	Power supply (5V)
60	I/O	MD15	Sound memory data
61	O	DSD	DAC interface serial data output
62	O	DBCK	DAC interface BCK
63	O	DLRCK	DAC interface LRCK
64	O	DSCK	DAC interface system clock [256fs clock]
65	I	SCA23	SCPU address bus
66		SCA22	
67		SCA21	
68		SCA20	
69		SCA19	
70	–	VSS	GND
71	I	SCA18	SCPU address bus
72		SCA17	
73		SCA16	
74		SCA15	
75		SCA14	
76		SCA13	
77		SCA12	
78		SCA11	
79		SCA10	
80	–	VDD	Power supply (5V)
81	I	SCA9	SCPU address bus
82		SCA8	
83		SCA7	
84		SCA6	
85		SCA5	
86		SCA4	
87		SCA3	
88		SCA2	
89		SCA1	
90	–	VSS	GND
91	I	SCFC0	SCPU status input
92		SCFC1	
93		SCFC2	
94	I	$\overline{\text{SCWTN}}$	SCPU write
95	I	$\overline{\text{SCLDSN}}$	SCPU SCD [7-0] strobe
96	I	$\overline{\text{SCUDSN}}$	SCPU SCD [15-8] strobe
97	I	$\overline{\text{SCASN}}$	SCPU address strobe
98	–	$\overline{\text{TESTN}}$	LSI test signal (Not connected)
99	–	VDD	Power supply (5V)
100	O	$\overline{\text{SCDTAKN}}$	SCPU data acknowledge
101	O	$\overline{\text{SCAVECN}}$	SCPU auto vector interrupu specification
102	O	$\overline{\text{SCIPL0N}}$	SCPU interrupt level specification
103		$\overline{\text{SCIPL1N}}$	
104		$\overline{\text{SCIPL2N}}$	
105	I/O	SCD0	SCPU data bus

No.	I/O	Pin Name	Function
106	I/O	SCDI	SCPU data bus
107	–	VSS	GND
108	I/O	SCD2	SCPU data bus
109		SCD3	
110		SCD4	
111		SCD5	
112		SCD6	
113		SCD7	
114		SCD8	
115	–	VDD	Power supply (5V)
116	I/O	SCD9	SCPU data bus
117		SCD10	
118		SCD11	
119	–	VSS	GND
120	I/O	SCD12	SCPU data bus
121		SCD13	
122		SCD14	
123		SCD15	
124	–	VSS	GND
125	I	$\overline{\text{MCCSN}}$	Select signal from MCPU
126	I	MCCK	28 MHz clock from MCPU
127	–	VDD	Power supply (5V)
128	I/O	MCD7	MCPU data bus

■ SCSP Chip Block Diagram

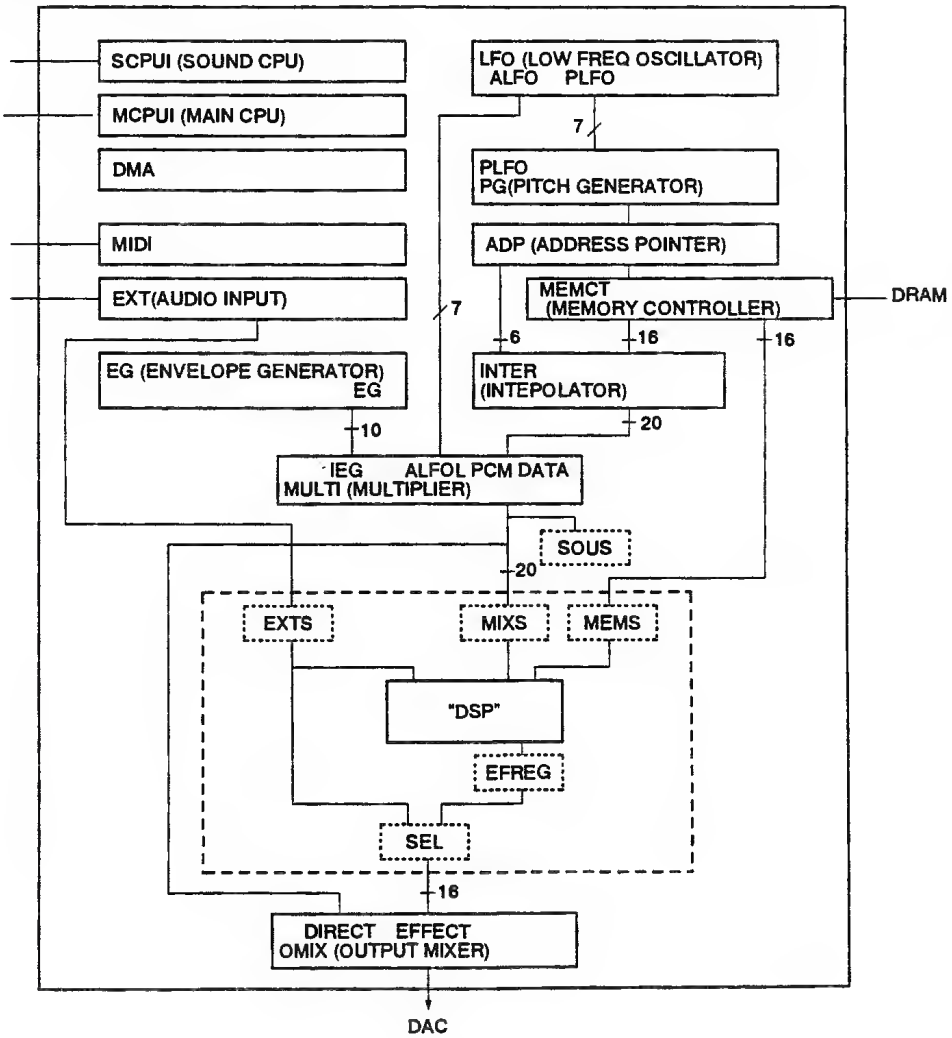

IC18 SOUND CPU (68000)

IC MC68EC000FN12 PLCC MOTOROLA

Parts No. : 315-0941

■ Top View

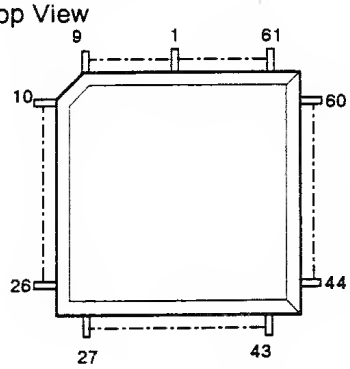

■ Signal Description

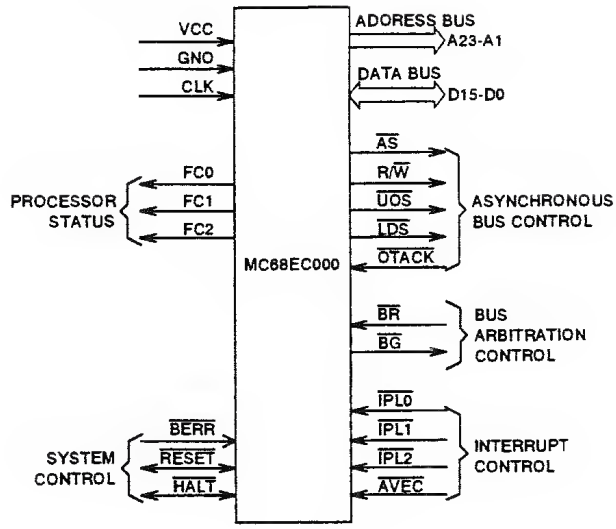

■ Description

No.	I/O	Name	Function
1	–	GND	
2	I/O	D4	Data bus
3		D3	
4		D2	
5		D1	
6		D0	
7	O	$\overline{AS}$	Address strobe
8		$\overline{UDS}$	Upper data strobe
9		$\overline{LDS}$	Lower data strobe
10		R/$\overline{W}$	Read/write
11	I	$\overline{DTACK}$	Data transfer acknowledge
12	O	$\overline{BG}$	Bus grant
13	I	$\overline{BR}$	Bus request
14	–	VCC	Power
15			
16	I	CLK	Clock
17	–	GND	Ground
18			
19	I	MODE	8 bit/16 bit select
20	I/O	$\overline{HALT}$	Halt
21	I/O	$\overline{RESET}$	Reset
22	–	NC	Not connected
23	I	$\overline{AVEC}$	
24	I	$\overline{BERR}$	Bus error
25	I	$\overline{IPL2}$	Interrupt control
26		$\overline{IPL1}$	
27		$\overline{IPL0}$	
28	O	FC2	Processor status
29		FC1	
30		FC0	
31	O	A0	Address bus
32		A1	
33		A2	
34		A3	

No.	I/O	Name	Function
35	–	GND	Ground
36	O	A4	Address bus
37		A5	
38		A6	
39		A7	
40		A8	
41		A9	
42		A10	
43		A11	
44		A12	
45		A13	
46		A14	
47		A15	
48		A16	
49		A17	
50		A18	
51		A19	
52		A20	
53	–	VCC	Power
54	O	A21	Address bus
55		A22	
56		A23	
57	–	GND	Ground
58	I/O	D15	Data bus
59		D14	
60		D13	
61		D12	
62		D11	
63		D10	
64		D9	
65		D8	
66		D7	
67		D6	
68		D5	

IC19 Sound DRAM

IC HM514270AJ-8 SOJ HITACHI
Parts No. : 315-0777-80

IC UPD424270LE-70 SOJ NEC
Parts No. : 315-0739-70

IC HM514270AJ-7 SOJ HITACHI
Parts No. : 315-0777-70

IC MN414270SJ-08 SOJ PANASONIC
Parts No. : 315-0822-80

■ Top View & Pin Layout

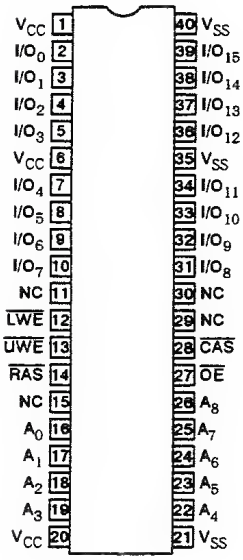

Input State				Output State	Operation Mode
$\overline{RAS}$	$\overline{CAS}$	$\overline{UWE}$	$\overline{LWE}$		
H	H	D	D	Open	Standby
H	L	H	H	Valid	Standby
L	L	H	H	Valid	Read cycle
L	L	L 2)	L 2)	Open	Early write cycle
L	L	L 2)	L 2)	Underlined	Delayed write cycle
L	L	H→L	H→L	Valid	Read modified write cycle
L	H	D	D	Open	$\overline{RAS}$ only refresh cycle
H→L	L	D	D	Open	$\overline{CAS}$ before /RAS refresh cycle
L	H→L	H	H	Valid	High-speed page mode read cycle
L	H→L	L 2)	L 2)	Open	High-speed page mode early write cycle
L	H→L	L 2)	L 2)	Underlined	High-speed page mode delayed write cycle
L	H→L	H→L	H→L	Valid	High-speed page mode read modified write cycle

Note: H=High(inactive), L=Low(active), D=Don't care.

IC20 PLL

IC CUSTOM CHIP PLL HQFP
Parts No. : 315-5746

■ Top View

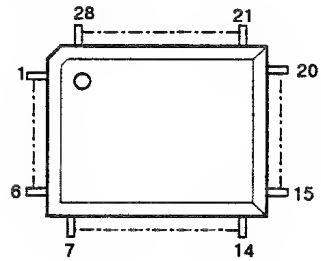

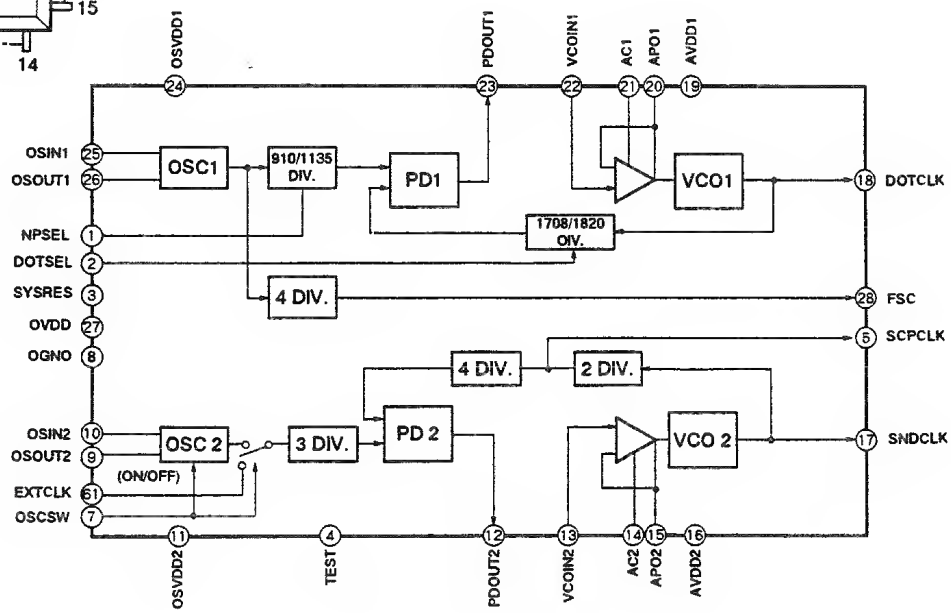

■ Description

No.	I/O	Name	Function
1	I	NPSEL	NTSC (5V)/PAL (0V) mode switching control
2		DOTSEL	320PIX (0V)/352PIX (5V) mode switching control
3		SYSRES	Reset (0V reset)
4		TEST	Test pin
5	O	SCPCLK	Clock signal output
6	I	EXTCLK	External clock input / CMOS I with pull-down resistor incorporated
7		OSCSW	Crystal oscillation/external clock signal input switching control (5V: Crystal oscillation, 0V: External clock signal) / CMOS I with pull-up resistor incorporated
8	–	DGND	Ground of digital circuits
9	O	OSOUT2	Crystal oscillator output (OSC2) / Oscillation output O
10	I	OSIN2	Crystal oscillator input (OSC2) / Oscillation input I
11	–	OSVDD2	VDD of crystal oscillator (OSC2)
12	O	PDOUT2	Phase detector (PD2) output
13	I	VCOIN2	VCO2 input / Analog I
14	–	AC2	Phase compensator pin / Analog
15	O	APO2	VCO2 amp output / Analog O
16	–	AVDD2	Analog VDD of VCO2
17	I/O	SNDCLK	Clock signal output
18		DOTCLK	Clock signal output
19	–	AVDD1	Analog VDD of VCO1
20	O	APO1	VCO1 amp output / Analog O
21	–	AC1	Phase compensator pin / Analog
22	I	VCOIN1	VCO1 input / Analog
23	O	PDOUT1	Phase detector (PD1) output
24	–	OSVDD1	VDD of crystal oscillator (OSC1)
25	I	OSIN1	Crystal oscillator input (OSC1) / Oscillation input I
26	O	OSOUT1	Crystal oscillator output (OSC1) / Oscillation output O
27	–	DVDD	VDD of digital circuits
28	O	FSC	Clock output signal

IC21

IC CXA1645M SOP SONY

Parts No. : 315-5314

■ Block Diagram

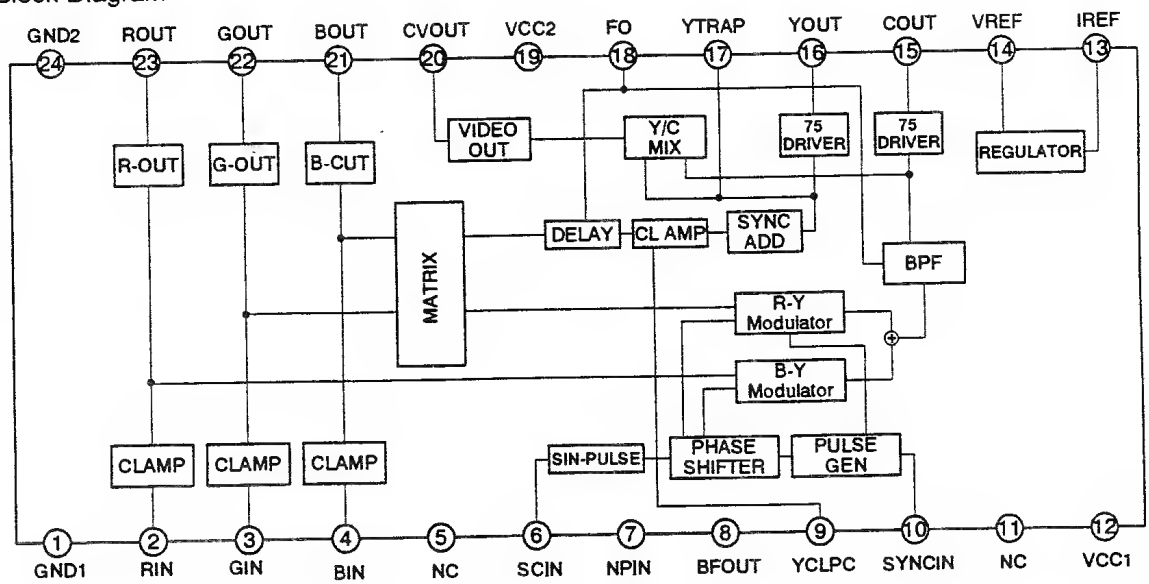

■ Description

No.	I/O	Pin Name	Function
1	–	GND1	Ground of circuits other than RGB, composite video and Y/C output circuits.
2	I	RIN	Analog RGB signal inputs. The signals should be input with 100%=1Vp-p (max.).
3		GIN	
4		BIN	
5	–	NC	Not connected.
6	I	SCIN	Subcarrier input
7	I	NPIN	NTSC/PAL mode switching pin
8	O	BFOUT	BF pulse monitoring output
9	–	YCLPC	Time constant which determines the Y signal clamp is connected.
10	I	SYNC IN	Composite sync signal input. Receives it at the TTL level.
11	–	NC	Not connected.
12	–	VCC1	Power supply of circuit other than RGB, composite video and Y/C output
13	–	IREF	Pin to determine the internal reference current level.
14	–	VREF	Internal reference voltage pin.
15	O	COUT	Chroma signal output. Can drive a 75 Ω load.
16	O	YOUT	Y (luma) signal output. Can drive a 75 Ω load.
17	–	YTRAP	Reduces cross-color caused by subcarrier frequency components contained in the Y signal.
18	–	FO	Adjusts fo of the internal filter. Connect the following resistor between this pin and ground depending on the NTSC or PAL mode.
19	–	VCC2	Power supply of RGB, composite video and Y/C output circuits.
20	O	CVOUT	Composite video signal output. This can drive a 75 Ω load.
21	O	BOUT	Analog RGB signal outputs. These can drive a 75 Ω load.
22		GOUT	
23		ROUT	
24	–	GND2	Ground of RGB, composite video and Y/C output circuits.

IC22 DAC

IC TDA1386T SOP PHILIPS

Parts No. : 313-5313

■ Top View

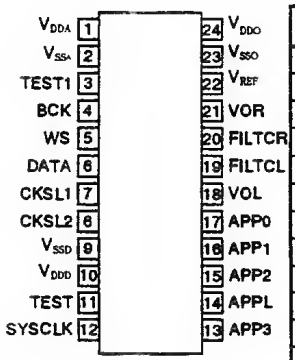

■ Description

No.	I/O	Pin Name	Function
1	–	VDDA	Analog supply voltage
2	–	VSSA	Analog ground
3	I	TEST1	Test input 1; pin should be connected to ground.
4	I	BCK	Bit clock input.
5	I	WS	Word select input.
6	I	DATA	Data input.
7	I	CKSL1	Format selection 1.
8	I	CKSL2	Format selection 2.
9	–	VSSD	Digital ground
10	–	VDDD	Digital supply voltage.
11	I	TEST2	Test input 2 ; pin should be connected to ground.
12	–	SYSCLK	System clock 256 fs
13	I	APP3	Application mode 3 input.

■ Block Diagram

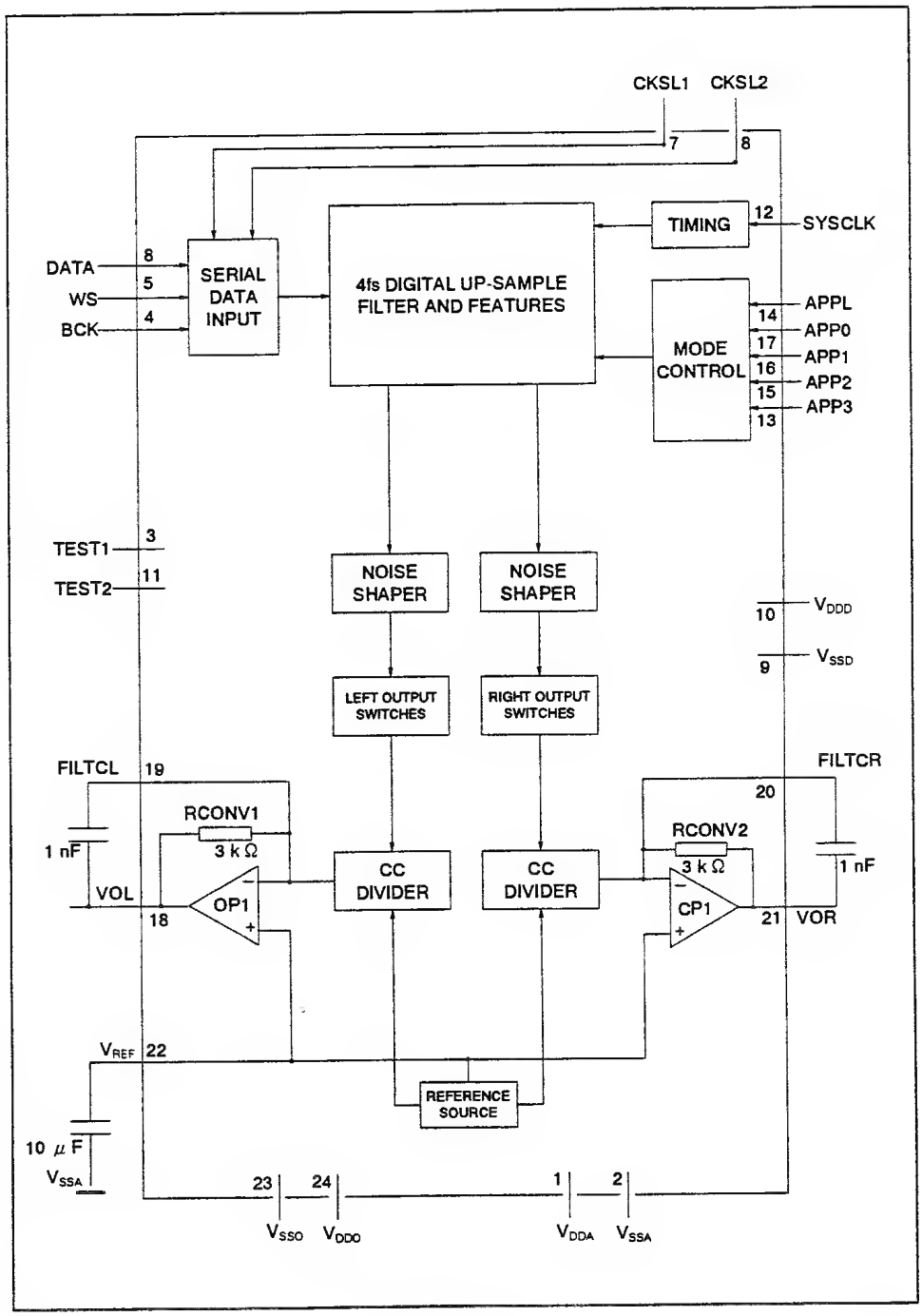

IC23/24 74VHC04

IC 74VHC04 SOP 300MIL

Parts No. : 314-0632

■ Top View & Pin Layout

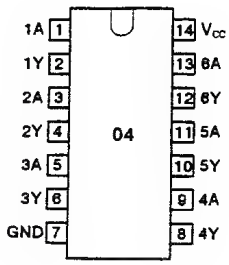

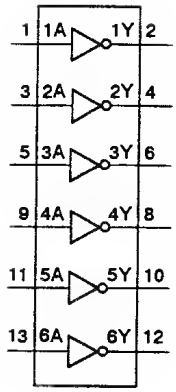

IC25

IC S-80741AL-A5 CHIP

Parts No. : 313-5322

■ Top View

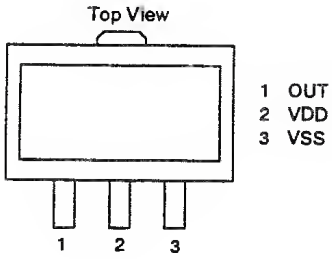

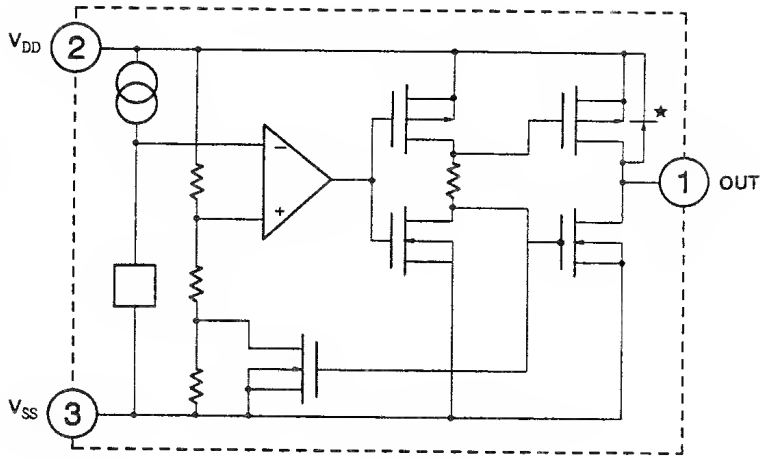

IC26/27/29/30 74LS245

IC 74LS245 SOP 300MIL

Parts No. : 314-0563

■ Top View & Pin Layout

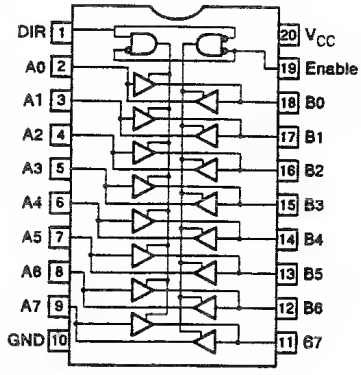

■ Function Table

Enable $\overline{G}$	Direction Control DIR	Operation
L	L	B data to A bus
L	H	A data to B bus
H	×	Isolation

H : High level
L : Low level
X : "H" or "L" level

IC28 OCTAL BUS TRANSCEIVER

IC 74ACT245 SOP 300MIL
Parts No. : 314-0649

Top View

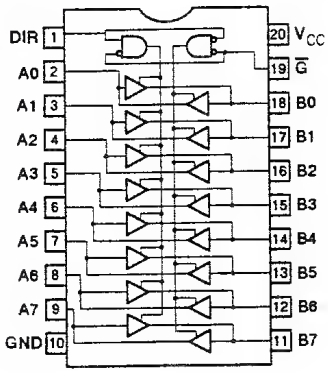

Logical Operation Circuit

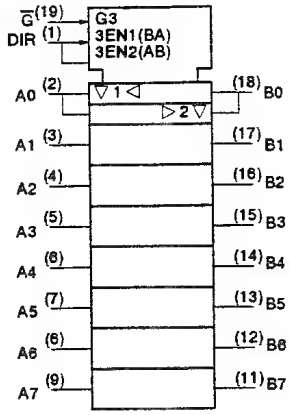

Truth Value Table

INPUT		FUNCTION		OUTPUT STATE
$\overline{G}$	DIR	A BUS	B BUS	
L	L	OUTPUT	INPUT	A=B
L	H	INPUT	OUTPUT	B=A
H	X	High impedance		Z

X: Don't care
Z: High impedance

IC31/32 DRAM

IC HM514260AJ-7 SOJ
Parts No. : 315-0947-70

IC UPD424260LE-70-E2 SOJ NEC
Parts No. : 315-0985-70

IC TC514260BJ-70 SOJ TOSHIBA
Parts No. : 315-0986-70

IC KM416C256BJ-7 SOJ SUMSUNG
Parts No. : 315-0983-70

IC MB814260-70PJ-G SOJ FUJITSU
Parts No. : 315-0984-70

IC HY514260BJC-70 SOJ HYUNDAI
Parts No. : 315-1030-70

Top View

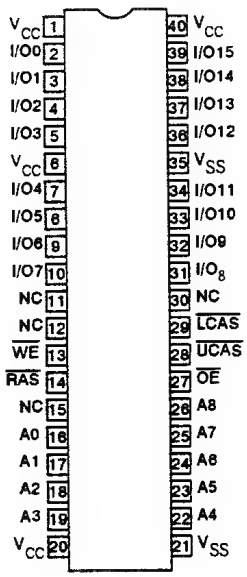

IC33

IC 74HC157 SOP
Parts No. : 314-0634

Top View

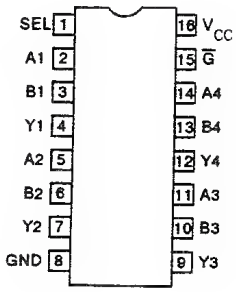

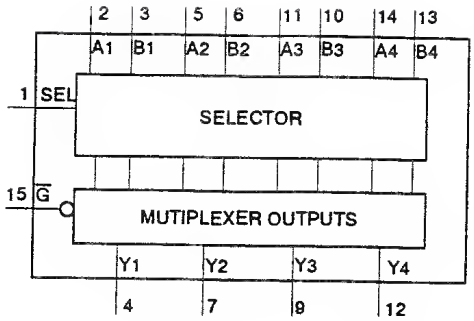

Description

No.	Name	Function
1	SEL	Common data select input
2	A1	Data inputs from source 0
3	B1	Data inputs from source 1
4	Y1	Multiplexer outputs
5	A2	Data inputs from source 0
6	B2	Data inputs from source 1
7	Y2	Multiplexer outputs
8	GND	Ground (0V)
9	Y3	Multiplexer outputs
10	B3	Data inputs from source 1
11	A3	Data inputs from source 0
12	Y4	Multiplexer outputs
13	B4	Data inputs from source 1
14	A4	Data inputs from source 0
15	$\overline{G}$	Enable input (active LOW)
16	V_{cc}	Positive supply voltage

IC34

IC UPC78L05T CHIP
Parts No. : 313-5323

IC TA78L05F CHIP
Parts No. : 313-5323-01

Top View

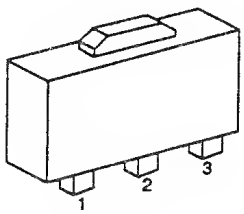

1. OUTPUT
2. COMMON (SHIELD PLATE)
3. INPUT

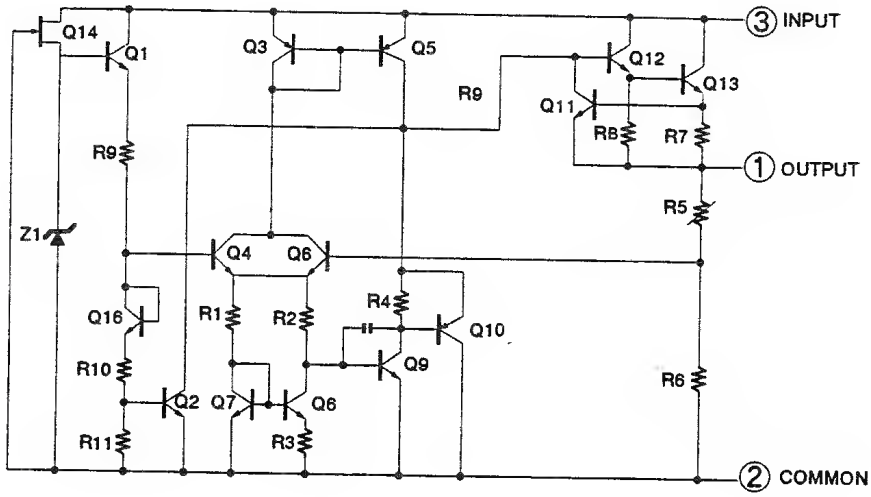

IC35

IC S-80723AN-DL CHIP
Parts No. : 313-5328

Top View

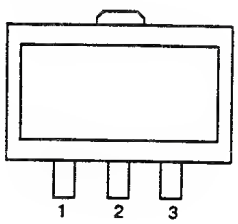

1. OUT
2. VDD
3. VSS

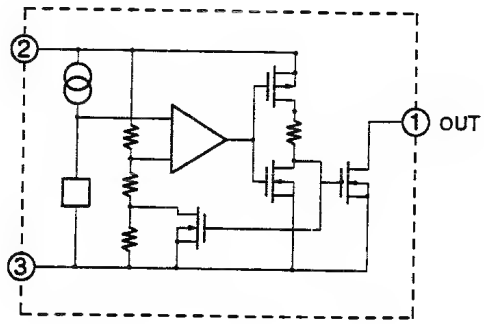

SH1 BOARD IC101 SH1 CPU

IC CUSTOM CHIP SH1 QFP
Parts No. : 315-5785

IC CUSTOM CHIP SH1A QFP
Parts No. : 315-5785A

■ Top View

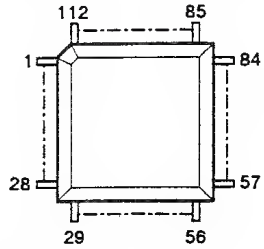

■ Description

No.	I/O	Pin Name	Function
1		$\overline{\text{IRQ L}}$	Host command interrupt input (level detection)
2		$\overline{\text{IRQ H}}$	CD-ROM sync detection, subcode sync detection interrupt input (level detection)
3		VSS	Ground
4	I/O	AD0	Data input/output
5		AD1	
6		AD2	
7		AD3	
8		AD4	
9		AD5	
10		AD6	
11		AD7	
12	–	VSS	Ground
13	I/O	AD8	Data input/output
14		AD9	
15	–	VCC	+5V
16	I/O	AD10	Data input/output
17		AD11	
18		AD12	
19		AD13	
20		AD14	
21		AD15	
22	–	VSS	Ground
23	O	A0	Address output
24		A1	
25		A2	
26		A3	
27		A4	
28		A5	
29		A6	
30		A7	
31	–	VSS	Ground
32	O	A8	Address output
33		A9	
34		A10	
35		A11	
36		A12	
37		A13	
38		A14	
39		A15	
40	–	VSS	Ground
41	O	A16	Address output
42		A17	
43	–	VCC	+5V
44	O	A18	Address output
45		A19	
46		A20	
47		A21	
48	O	NC	Not connected.
49	O	$\overline{\text{CASH}}$	DRAM CASH output

SH1 BOARD IC102 DRAM

IC HM514260AJ-8 SOJ
Parts No. : 315-0947-80

IC HM514260AJ-7 SOJ
Parts No. : 315-0947-70

Top View & Pin Layout

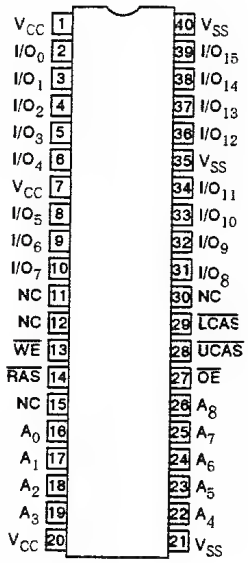

Pin Name

Pin Name	Function
A0-A8	address input
A0-A8	Refresh address input
I/O1-I/O4	Data input/output
$\overline{RAS}$	Row address strobe
$\overline{CAS}$	Column address strobe
$\overline{WE}$	Write enable
$\overline{OE}$	Output enable
V_{CC}	Power suppply (+5V)
V_{SS}	Ground

Block Diagram

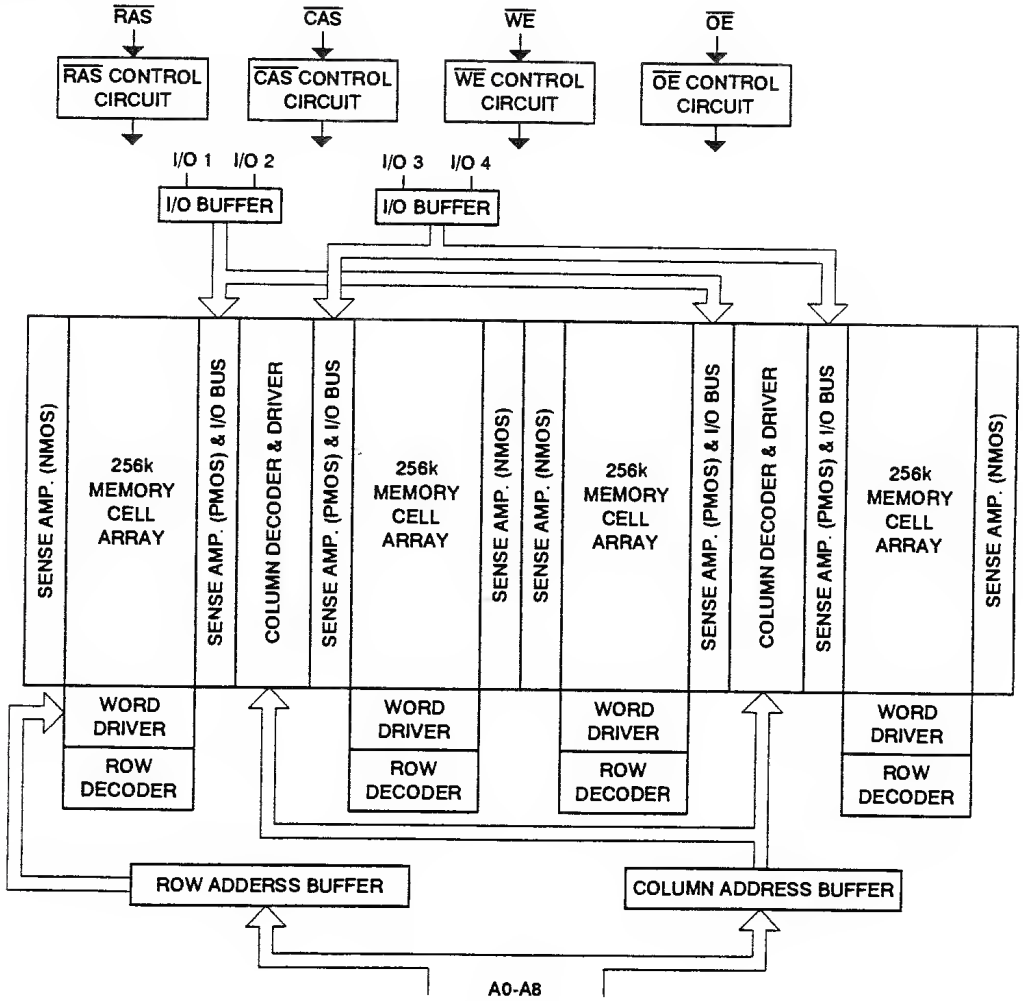

SH1 BOARD IC103

IC CUSTOM CHIP OCU YGR019A

Parts No. : 315-5873

Top View

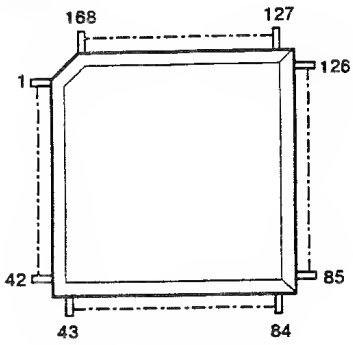

Block Diagram

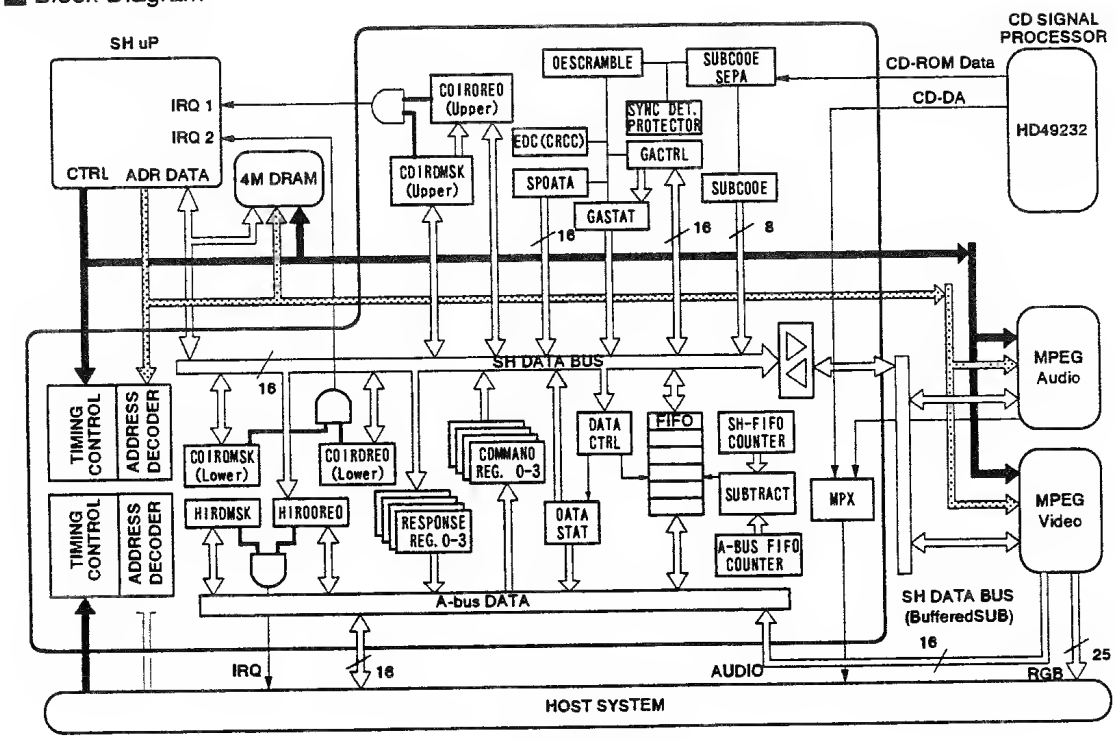

Description

No.	I/O	Name	Function
1	I	MVPRT	Video transparency control signal
2	I	MVR7	Video red color data
3		MVR6	
4		MVR5	
5		MVR4	
6		MVR3	
7	–	VCC	Power supply
8	–	VSS	Ground
9	I	MVG7	Video green color data
10		MVG6	
11		MVG5	
12		MVG4	
13		MVG3	
14	I	MVB7	Video blue color data
15	–	VSS	Ground
16	I	MVB6	Video blue color data
17		MVB5	
18		MVB4	
19		MVB3	
20	I	AA1	A-BUS address bus
21		AA2	
22		AA3	
23	–	VSS	Ground
24	I	AA4	A-BUS address bus
25		AA16	
26		AA17	
27		AA18	
28	I	ACS2	Chip select signal from A-BUS
29	I	WTRS	Wait control signal used to transfer MPEG video frame data
30	–	VSS	Ground
31	O	FDACK	MPEG video frame data transfer control signal
32	O	MVCS	MPEG video chip select signal
33	O	MACS	MPEG audio chip select signal
34	O	TP5	Test pin
35	–	VCC	Power supply
36	–	VSS	Ground
37	I	RESET	Gate array system reset signal
38	I	MABICK	Sync clock used to transfer MPEG audio serial data
39	I	MASDATAI	MPEG audio serial data signal
40	I	MALRCLK	Clock used to detect MPEG audio serial data L/R
41	I	TP2	Test pin
42	I	SCS6	SH chip select 6
43	–	VSS	Ground
44	I	SDL0	SH uP subdata bus
45		SDL1	
46		SDL2	
47		SDL3	
48		SDL4	
49	–	VCC	Power supply
50	–	VSS	Ground
51	I	SDL5	SH uP subdata bus
52		SDL6	
53		SDL7	
54		SDL8	
55		SDL9	
56		SDL10	

No.	I/O	Name	Function
57	–	VSS	Ground
58	I	SDL11	SH uP subdata bus
59		SDL12	
60		SDL13	
61		SDL14	
62		SDL15	
63	–	VCC	Power supply
64	–	VSS	Ground
65	I	SA21	SH uP address bus
66		SA20	
67		SA4	
68		SA3	
69		SA2	
70	I	SRD	SH uP read enable signal
71	–	VSS	Ground
72	I	SHCK	20MHz clock
73	I	SA1	SH uP address bus
74	I	IRQOUT	SH uP interrupt factor generation signal
75	I	SCS2	SH uP chip select 2
76	I	DACK1	Channel 1 DMA transfer response
77	–	VCC	
78	–	VSS	Ground
79	I	DACK0	Channel 0 DMA transfer response
80	I	CASH	DRAM control signal
81		CASL	
82	I	SWRH	SH uP upper byte write enable signal
83	I	SWRL	SH uP lower byte write enable signal
84	I	SA19	SH uP address bus
85	I	TP3	Test pin
86	–	VSS	Ground
87	O	DSWR	Delayed write cycle control signal
88	O	DREQ1	Channel 1 DMA transfer request
89	O	DREQ0	Channel 0 DMA transfer request
90	I	SDH15	SH uP main data bus
91	–	VCC	Power supply
92	–	VSS	Ground
93	I	SDH14	SH uP main data bus
94		SDH13	
95		SDH12	
96		SDH11	
97		SDH10	
98	–	VSS	Ground
99	I	SDH9	Power supply
100		SDH8	SH uP main data bus
101		SDH7	
102		SDH6	
103		SDH5	
104	–	VCC	Power supply
105	–	VSS	Ground
106	I	SDH4	SH uP main data bus
107		SDH3	
108		SDH2	
109		SDH1	
110		SDH0	
111	O	SIRQH	SH uP upper byte (CD-ROM) interrupt signal
112	–	VSS	Ground

No.	I/O	Name	Function
113	O	SIRQL	SH uP lower byte (A-BUS) interrupt signal
114	O	BCK	Audio serial data sync clock
115	O	LRCK	Audio L/R channel switching signal
116	–	VCC	Power supply
117	O	SD	Audio serial data
118	O	SUBCK	Subcode input clock
119	–	VCC	Power supply
120	–	VSS	Ground
121	I	CFCK0	Frame sync signal
122	I	SUBOUT	CD subcode data
123	I	SI	Subcode block sync signal
124	I	DAS	CD-DA audio serial data
125	I	CKX	CD audio serial data sync clock
126	I	MPX	CD audio L/R channel switching signal
127	–	VSS	
128	I	C2F	C2 error flag
129	I	SMPX	CD-ROM data byte sync signal
130	I	SDAS	CD-ROM serial data
131	I	SCKX	CD-ROM serial data bit sync signal
132	–	VSS	Ground
133	–	VCC	Power supply
134	–	VSS	Ground
135	I	ATIMI	A-BUS timing control signal
136		ATIM0	
137	I	ARD	A-BUS read signal
138	–	VSS	Ground
139	I	AFC0	A-BUS timing control signal
140	I	AWR0	A-BUS lower byte write signal
141	I	AWR1	A-BUS upper byte write signal
142	I	AFCI	A-BUS timing control signal
143	–	VSS	Ground
144	O	AWAIT	A-BUS wait control signal
145	O	AIRQ	A-BUS interrupt signal
146	–	T	Test signal for scan pass
147	I	AD0	A-BUS data bus
148		AD1	
149	–	VCC	Power supply
150	–	VSS	Ground
151	I	AD2	A-BUS data bus
152		AD3	
153		AD4	
154		AD5	
155	–	VSS	Ground
156	I	AD6	A-BUS data bus
157		AD7	
158		AD8	
159		AD9	
160		AD10	
161	–	VCC	Power supply
162	–	VSS	Ground
163	I	AD11	A-BUS data bus
164		AD12	
165		AD13	
166		AD14	
167		AD15	
168	–	VSS	Ground

11. EXPLODED VIEW & PARTS LIST

11-1. Exploded View

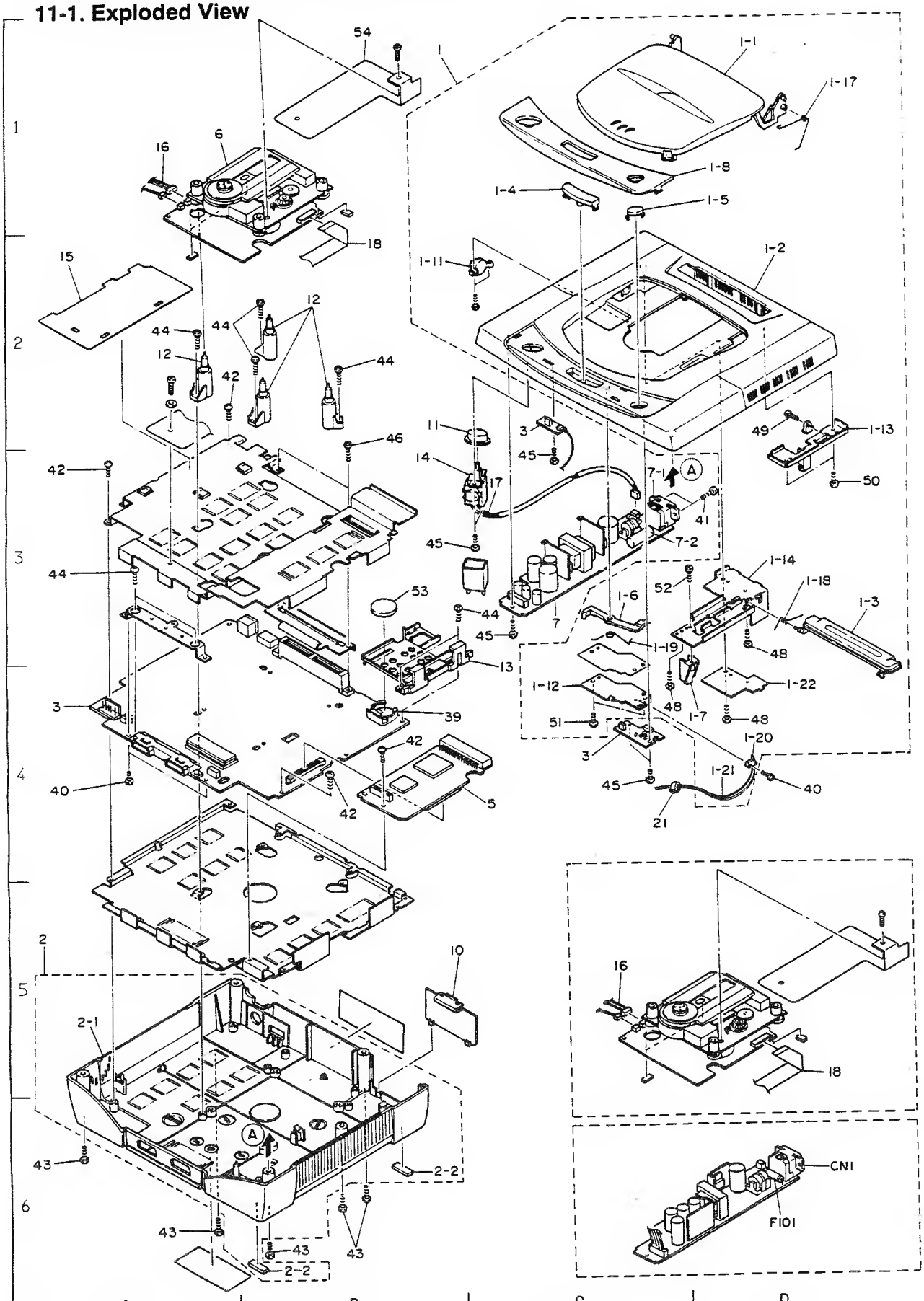

11-2. Mechanical Parts List

Ref. No.	Parts No.	Description	Ref. No.	Parts No.	Description
1	610-5862	ASSY TOP CASE SATURN EUR [1]	54	601-7815	STAELE PROTECTION SHEET SAT
1	610-5927	ASSY TOP CASE SATURN AUS [2]			
1-1	610-5864	ASSY LID CO SATURN EUR			
1-2	253-7015	TOP CASE SATURN EUR			
1-3	253-7013	LID CRTG SATURN USA			
1-4	253-6917-03	BUTTON OPEN SATURN USA			
1-5	253-6919-03	BUTTON RESET SATURN USA			
1-6	253-6920	BUTTON OPEN LEVER SATURN JPN			
1-7	253-7012	MOUNT POWER UNIT PCB SAT USA			
1-8	253-7010	PANEL DEC. FRONT SATURN USA			
1-11	601-7774	OIL DUMPER SATURN			
1-12	250-5404	BRACKET LEVER SATURN JPN			
1-13	250-5423	BRACKET LID CD SPRING SAT USA			
1-14	250-5424A	BRACKET LID CD HOLDER SAT USA A			
1-17	125-5125	SPRING LID CD SATURN JPN			
1-18	125-5126	SPRING LIO CRTG SATURN JPN			
1-19	125-5127	SPRING ARM SATURN JPN			
1-20	510-5068	DETECTOR SW SPPB11			
1-21	600-6536	WIRE HARN 2P FOR DETECTOR USA			
1-22	601-7726	PLATE SEVER SMALL SATURN JPN			
2	610-5863	ASSY BOTTOM CASE SATURN USA			
2-1	253-7016	BOTTDM CASE SATURN EUR			
2-2	601-7658	RUBBER FOOT SATURN JPN			
3	837-11492	ASSY IC BD SATURN VAO PAL			
5	838-10834	IC BD SATURN SH1			
6	610-5679-20	ASSY CO DRIVE UNIT SATURN			
6	610-5679-21				
7	400-5271	AC POWER UNIT SATURN EUR			
7	400-5272	AC POWER UNIT SATURN EUR			
⚠7-1	601-7672	INLET FOR UL/CSA SATURN			
⚠7-2	514-5066	FUSE 1.6A 080026			
10	253-6915-03	LIO BATTERY SATURN EUR			
11	253-6918-03	BUTTON POWER SATURN USA			
11	253-6918A-03	BUTTON POWER SATURN USA A			
12	253-6921	MOUNT MECHA SATURN JPN			
13	253-6932	SLIDE RAIL SATURN JPN			
14	510-5069	POWER SW SDDLD			
15	601-7979	PLATE SEVER LARGE SATURN USA			
16	600-6416	WIRE HARN 5P FOR ST CD			
17	600-6560	WIRE HARN 2P FOR P.SW NEW			
18	600-6431	FFC 20P L=180MM			
18	600-6431-01	FFC 20P L=180MM			
21	270-5094	FERRITE CORE 8P53RB120070060M			
21	270-5095	FERRITE CORE L6 T12.5X5.5X7			
38	250-5417	BRACKET 9P CONN HOLDER			
39	253-6922	BAT HOLDER SATURN MATSUSHITA			
40	029-000034	B-TITE SCR PH 3X8			
41	029-000034-0B	B-TITE SCR PH BLK 3X8			
42	029-000035	B-TITE SCR PH 3X10			
43	029-000035-0B	B-TITE SCR PH BLK 3X10			
44	029-000036	B-TITE SCR PH 3X12			
45	029-000049	B-TITE SCR BRH 2.6X8			
46	029-000061	B-TITE SCR PH 3X14			
47	029-000063	S-TITE SCR BI H2X4			
48	029-000049	B-TITE SCR BRH 2.6X8			
49	029-000049-0B	8-TITE SCR BRH BLK 2.6X8			
50	029-000052	B-TITE SCR PH 2X8			
51	029-000067-0B	B-TITE SCR BRH BLK 2.6X6			
52	029-000064	S-TITE SCR PH 2X8			
53	401-0054	BATTERY CR2032/1F			

【Note】 [1]····EUR [2]····AUSTRALIA

11-3. Electrical Parts List

11-3-1. IC BD STATURN MAIN VA0 USA

Circuit No.	Parts No.	Description
IC1	315-0922A	IC H06417095F2B OFP HITACHI
IC1	315-099B	IC H06417095SF2B OFP HITACHI
IC2	315-0922A	IC H06417095F2B OFP HITACHI
IC2	315-0998	IC HD6417095SF28 OFP HITACHI
IC3	315-092B-17	IC HM5241605TT-17 TSOP HITACHI
IC3	315-1022-12	IC UPD4504161G5-A12 TSOP NEC
IC3	315-092B-15	IC HM5241605TT-15 TSOP HITACHI
IC4	315-092B-17	IC HM5241605TT-17 TSOP HITACHI
IC4	315-1022-12	IC UPD4504161G5-A12 TSOP NEC
IC4	315-092B-15	IC HM5241605TT-15 TSOP HITACHI
IC5	315-56B8	IC CUSTOM CHIP SCU QFP YAMAHA
IC6	315-5778	IC CUSTOM CHIP DCC QFP TOSHIBA
IC7	EPR-17933	OS SATURN IPL-ROM PAL DIP
IC7	MPR-17933	OS SATURN IPL-ROM PAL DIP
ICB	315-094B-10	IC CXK5B267AM-10L SOP
ICB	315-0930-10	IC UPD43257B-10LL SOP
ICB	315-0964-10	IC M5M5255BFP-12LL SOP
ICB	315-0965-10	IC SRM20257LLM10 SOP
ICB	315-1002-70	IC UM62257M-70LL SOP
IC9	315-5744	IC CUSTOM CHIP SMPC QFP
IC10	315-56B9	IC CUSTOM CHIP VDP1 QFP
IC10	315-5BB3	IC CUSTOM CHIP VDP1 S QFP
IC11	315-0928-17	IC HM52416D5TT-17 TSOP HITACHI
IC11	315-1022-12	IC UPD4504161G5-A12 TSOP NEC
IC11	315-0928-15	IC HM5241605TT-15 TSOP HITACHI
IC12	315-0910-12	IC UPD4502161G5-A12 TSOP NEC
IC12	315-1D17-17	IC HM5221605TT-17 TSOP HITACHI
IC12	315-1012-17	IC LC382161T-17 TSOP SANYO
IC13	315-0910-12	IC UPD4502161G5-A12 TSOP NEC
IC13	315-1017-17	IC HM5221605TT-17 TSOP HITACHI
IC13	315-1012-17	IC LC382161T-17 TSOP SANYO
IC14	315-5690	IC CUSTOM CHIP VDP2 QFP YAMAHA
IC14	315-5690-02	IC CUSTOM CHIP VDP2 QFP HH
IC14	315-5B90	IC CUSTOM CP VDP2 S QFP YAMAHA
IC15	315-0910-12	IC UPD4502161G5-A12 TSOP NEC
IC15	315-1017-17	IC HM5221605TT-17 TSOP HITACHI
IC15	315-1012-17	IC LC3B2161T-17 TSOP SANYO
IC16	315-091D-12	IC UPD4502161G5-A12 TSOP NEC
IC16	315-1017-17	IC HM5221605TT-17 TSOP HITACHI
IC16	315-1012-17	IC LC38161T-17 TSOP SANYO
IC17	315-5687	IC CUSTOM CHIP SCSP QFP YAMAHA
IC18	315-0941	IC MC68EC000FN12 PLCC MOTOROLA
IC19	315-0777-B0	IC HM514270AJ-8 SOJ HITACHI
IC19	315-0739-70	IC UPD424270LE-70 SOJ NEC
IC19	315-0777-70	IC HM514270AJ-7 SOJ HITACHI
IC19	315-0822-80	IC MN414270SJ-08 SOJ PANASONIC
IC20	315-5746	IC CUSTOM CHIP PLL HOFP
IC21	313-5314	IC CXA1645M SOP SONY
IC22	313-5313	IC TDA1386T SOP PHILIPS
IC23	314-0632	IC 74VHC04 SOP 300MIL
IC24	314-0632	IC 74VHC04 SOP 300MIL
IC25	313-5322	IC S-80741AL-A5 CHIP SEIKO
IC26	314-0563	IC 74LS245 SOP 300MIL
IC27	314-0563	IC 74LS245 SOP 300MIL
IC2B	314-0649	IC 74ACT245 SOP 300MIL
IC29	314-0563	IC 74LS245 SOP 300MIL
IC30	314-0563	IC 74LS245 SOP 300MIL
IC31	315-0947-70	IC HM514260AJ-7 SOJ
IC31	315-0985-70	IC UPD424260LE-7D-E2 SOJ NEC
IC31	315-09B6-70	IC TC514260BJ-70 SOJ TOSHIBA
IC31	315-0983-70	IC KM416C256BJ-7 SOJ SUMSUNG
IC31	315-0984-70	IC MB814260-70PJ-G SOJ FUJITSU
IC31	315-1030-70	IC HY514260BJC-7D SDJ HYUNDAI
IC32	315-0947-7D	IC HM514260AJ-7 SDJ
IC32	315-D985-70	IC UPD424260LE-70-E2 SOJ NEC
IC32	315-0986-7D	IC TC514260BJ-70 SOJ TOSHIBA
IC32	315-09B3-70	IC KM416C256BJ-7 SOJ SUMSUNG
IC32	315-0984-70	IC MBB14260-7DPJ-G SOJ FUJITSU
IC32	315-1030-70	IC HY514260BJC-70 SDJ HYUNDAI
IC33	314-0634	IC 74HC157 SOP
IC34	313-5323	IC UPC7BLD5T CHIP NEC
IC34	313-5323-01	IC TA78L05F CHIP TOSHIBA
IC35	313-5328	IC S-80723AN-DL CHIP SEIKO
CN1	2D9-5070	EDGE CONN 134P N630-9523-T0D6
CN1	209-5070A	EDGE CONN 134P N63D-9523-T006A
CN2	209-5074	CONN 9P*2 CSS5018-01D1R
CN2XA	NOT USED	NOT USED
CN2XB	NOT USED	NOT USED
CN3	212-5453	CONN 6P B5P6-VH
CN4	212-5440	CONN 100P FX6A-100S-0.8SV2
CN5	212-5431	MINI DIN CONN 10P FOR A/V HOSI
CN5	212-5481	MINI DIN 10P TCS7716-432010
CN5X	NOT USED	NOT USED
CN6	209-5075	CONN 11P TCX3072-010100 HOSHID
CN8	212-5454	CONN 5P B4(5)B-PH-K-S
CN9	212-5454	CONN 5P B4(5)B-PH-K-S
CN10	NOT USED	NOT USED
CN11	NOT USED	NOT USED
CN12	212-5457	CONN 3P SJ21-03WT
SW3	510-5063	TACT SW SKEYAC ALPS
D1	4B1-5072	DIODE CHIP 1SS184 TOSHIBA
D2	481-516B	DIODE CHIP HRW0202A HITACHI
D2	481-5199	DIODE CHIP 1SS377 TOSHOBA
D2	481-5201	DIODE CHIP RB415D ROHM
D3	481-516B	DIODE CHIP HRW0202A HITACHI
D3	481-5199	DIODE CHIP 1SS377 TOSHIBA
D3	481-5201	DIODE CHIP RB415D ROHM
D4	481-5072	DIODE CHIP 1SS184 TOSHIBA
D5	481-5179	DIODE CHIP MA153A MATSUSHITA
D6	481-5168	DIODE CHIP HRW0202A HITACHI
D6	481-5199	DIODE CHIP 1SS377 TOSHIBA
D6	481-5201	DIODE CHIP RB415D ROHM
TR1	482-5126	XSTR 2SC1623 L5..7 CHIP NEC
TR2	482-5125-01	XSTR 2SAB12 CHIP M5..6 NEC
TR3	482-5260	XSTR 2SD2114K(V.W)CHIP ROHM
TR4	482-5260	XSTR 2SD2114K(V.W)CHIP ROHM
L1	180-5137	CHIP INDUCTOR 100UH 10% KOA
L1	180-5137-01	P.COIL CHIP 100UH ELJFA101KF
L2	180-5137	CHIP INDUCTOR 100UH 10% KOA
L2	180-5137-01	P.COIL CHIP 100UH ELJFA101KF
L3	180-5142	P.COIL CHIP 100UH LOH3C101K04
L3	180-5142-01	P.COIL CHIP 100UH NLFC322522T
L4	180-5142	P.COIL CHIP 100UH LOH3C101K04
L4	180-5142-01	P.COIL CHIP 100UH NLFC322522T
L5	180-5142	P.COIL CHIP 100UH LOH3C101K04
L5	180-5142-01	P.COIL CHIP 100UH NLFC322522T

Circuit No.	Parts No.	Description
L6	180-5142	P. COIL CHIP 100UH LOH3C101K04
L6	180-5142-01	P. COIL CHIP 100UH NLFC322522T
L8	180-5142	P. COIL CHIP 100UH LOH3C101K04
L8	180-5142-01	P. COIL CHIP 100UH NLFC322522T
L9	180-5142	P. COIL CHIP 100UH LOH3C101K04
L9	180-5142-01	P. COIL CHIP 100UH NLFC322522T
L10	180-5142	P. COIL CHIP 100UH LOH3C101K04
L10	180-5142-01	P. COIL CHIP 100UH NLFC322522T
FB3	NOT USED	NOT USED
FB4	476-2330-J-10	RES CHIP 33 OHM 1/10W 5%
FB5	NOT USED	NOT USED
FB6	NOT USED	NOT USED
FB7	NOT USED	NOT USED
FB8	NOT USED	NOT USED
FB9	NOT USED	NOT USED
FB10	NOT USED	NOT USED
FB13	NOT USED	NOT USED
FB15	NOT USED	NOT USED
FB16	NOT USED	NOT USED
FB17	NOT USED	NOT USED
FB18	479-5005-0000	RES CHIP 0 OHM 1/10W 2125
EMI2	271-0045	EMI FILTER STB101KB TAIYO
EMI3	271-0045	EMI FILTER STB101KB TAIYO
EMI5	271-0045	EMI FILTER STB101KB TAIYO
EMI6	271-0045	EMI FILTER STB101KB TAIYO
EMI7	271-0045	EMI FILTER STB101KB TAIYO
EMI8	271-0045	EMI FILTER STB101KB TAIYO
EMI9	271-0045	EMI FILTER STB101KB TAIYO
EMI10	271-0045	EMI FILTER STB101KB TAIYO
EMI11	271-0045	EMI FILTER STB101KB TAIYO
EMI12	271-0045	EMI FILTER STB101KB TAIYO
EMI13	271-0045	EMI FILTER STB101KB TAIYO
EMI14	271-0045	EMI FILTER STB101KB TAIYO
EMI15	271-0045	EMI FILTER STB101KB TAIYO
EMI16	271-0045	EMI FILTER STB101KB TAIYO
EMI17	271-0045	EMI FILTER STB101KB TAIYO
EMI18	271-0045	EMI FILTER STB101KB TAIYO
EMI19	271-0045	EMI FILTER STB101KB TAIYO
EMI20	271-0045	EMI FILTER STB101KB TAIYO
EMI21	271-0045	EMI FILTER STB101KB TAIYO
EMI22	271-0045	EMI FILTER STB101KB TAIYO
EMI23	271-0045	EMI FILTER ST8101KB TAIYO
EMI24	271-0045	EMI FILTER ST8101KB TAIYO
EMI25	271-0045	EMI FILTER STB101KB TAIYO
EMI26	271-0045	EMI FILTER ST8101KB TAIYO
EMI27	271-0045	EMI FILTER STB101KB TAIYO
EMI28	271-0045	EMI FILTER STB101KB TAIYO
EMI29	271-0045	EMI FILTER STB101KB TAIYO
EMI30	271-0045	EMI FILTER STB101KB TAIYO
EMI31	271-0045	EMI FILTER STB101KB TAIYO
EMI32	271-0045	EMI FILTER STB101KB TAIYO
EMI33	271-0045	EMI FILTER STB101KB TAIYO
EMI34	271-0045	EMI FILTER STB101KB TAIYO
EMI35	271-0045	EMI FILTER STB101KB TAIYO
C1	151-0307	CAP CER CP 0.022UF 50V ZF2125
C2	151-0521	CAP CER CP 470PF 50V SL2125
C3	151-0265	CAP CER CP 0.1UF 25V ZF2125
C4	151-0307	CAP CER CP 0.022UF 50V ZF2125
C5	151-0521	CAP CER CP 470PF 50V SL2125
C6	151-0265	CAP CER CP 0.1UF 25V ZF2125
C7	151-0265	CAP CER CP 0.1UF 25V ZF2125
C8	151-0265	CAP CER CP 0.1UF 25V ZF2125
C9	151-0265	CAP CER CP 0.1UF 25V ZF2125
C10	151-0265	CAP CER CP 0.1UF 25V ZF2125

Circuit No.	Parts No.	Description
C11	151-0265	CAP CER CP 0.1UF 25V ZF2125
C12	151-0265	CAP CER CP 0.1UF 25V ZF2125
C13	151-0265	CAP CER CP 0.1UF 25V ZF2125
C14	151-0265	CAP CER CP 0.1UF 25V ZF2125
C15	151-0265	CAP CER CP 0.1UF 25V ZF2125
C16	151-0265	CAP CER CP 0.1UF 25V ZF2125
C17	NOT USED	NOT USED
C18	151-0265	CAP CER CP 0.1UF 25V ZF2125
C19	151-0265	CAP CER CP 0.1UF 25V ZF2125
C20	151-0265	CAP CER CP 0.1UF 25V ZF2125
C21	151-0307	CAP CER CP 0.022UF 50V ZF2125
C22	151-0307	CAP CER CP 0.022UF 50V ZF2125
C23	151-0621	CAP CER CP 30PF 50V JCH2125
C24	151-0621	CAP CER CP 30PF 50V JCH2125
C25	151-0305	CAP CER CP 1000PF 50V KB2125
C26	151-0521	CAP CER CP 470PF 50V SL2125
C27	151-0318	CAP CER CHIP 33PF 50V CH2125
C28	151-0307	CAP CER CP 0.022UF 50V ZF2125
C29	151-0307	CAP CER CP 0.022UF 50V ZF2125
C30	151-0478	CAP CER CP 27PF 50V CH2125
C31	151-0377	CAP CER CP 100PF 50V KCH2125
C32	151-0307	CAP CER CP 0.022UF 50V ZF2125
C33	NOT USED	NOT USED
C34	NOT USED	NOT USED
C35	151-0320	CAP CER CP 68PF 50V J CH2125
C36	NOT USED	NOT USED
C37	151-0265	CAP CER CP 0.1UF 25V ZF2125
C38	151-0265	CAP CER CP 0.1UF 25V ZF2125
C39	151-0265	CAP CER CP 0.1UF 25V ZF2125
C40	151-0270	CAP CER CP 47PF 50V KSL2125
C41	151-0592	CAP CER CP 5PF/50V CCH2125
C42	151-0265	CAP CER CP 0.1UF 25V ZF2125
C43	151-0265	CAP CER CP 0.1UF 25V ZF2125
C44	151-0361	CAP CER CP 15PF 50V CH2125
C45	NOT USED	NOT USED
C46	NOT USED	NOT USED
C47	151-0318	CAP CER CHIP 33PF 50V CH2125
C48	NOT USED	NOT USED
C49	NOT USED	NOT USED
C50	151-0319	CAP CER CHIP 20PF 50V CH2125
C51	151-0319	CAP CER CHIP 20PF 50V CH2125
C52	151-0265	CAP CER CP 0.1UF 25V ZF2125
C53	151-0265	CAP CER CP 0.1UF 25V ZF2125
C54	151-0265	CAP CER CP 0.1UF 25V ZF2125
C55	151-0265	CAP CER CP 0.1UF 25V ZF2125
C56	151-0265	CAP CER CP 0.1UF 25V ZF2125
C57	151-0265	CAP CER CP 0.1UF 25V ZF2125
C58	151-0265	CAP CER CP 0.1UF 25V ZF2125
C59	151-0265	CAP CER CP 0.1UF 25V ZF2125
C60	151-0265	CAP CER CP 0.1UF 25V ZF2125
C61	151-0265	CAP CER CP 0.1UF 25V ZF2125
C62	151-0265	CAP CER CP 0.1UF 25V ZF2125
C63	151-0305	CAP CER CP 1000PF 50V KB2125
C64	151-0305	CAP CER CP 1000PF 50V KB2125
C65	NOT USED	NOT USED
C66	151-0265	CAP CER CP 0.1UF 25V ZF2125
C67	151-0265	CAP CER CP 0.1UF 25V ZF2125
C68	151-0265	CAP CER CP 0.1UF 25V ZF2125
C69	151-0265	CAP CER CP 0.1UF 25V ZF2125
C70	151-0265	CAP CER CP 0.1UF 25V ZF2125
C71	151-0265	CAP CER CP 0.1UF 25V ZF2125
C72	151-0265	CAP CER CP 0.1UF 25V ZF2125
C73	151-0265	CAP CER CP 0.1UF 25V ZF2125
C74	151-0265	CAP CER CP 0.1UF 25V ZF2125
C75	151-0265	CAP CER CP 0.1UF 25V ZF2125
C76	151-0265	CAP CER CP 0.1UF 25V ZF2125
C77	151-0265	CAP CER CP 0.1UF 25V ZF2125

Circuit No.	Parts No.	Description
C78	151-0265	CAP CER CP 0.1UF 25V ZF2125
C79	151-0265	CAP CER CP 0.1UF 25V ZF2125
C80	151-0265	CAP CER CP 0.1UF 25V ZF2125
C81	151-0265	CAP CER CP 0.1UF 25V ZF2125
C82	151-0265	CAP CER CP 0.1UF 25V ZF2125
C83	151-0265	CAP CER CP 0.1UF 25V ZF2125
C84	151-0265	CAP CER CP 0.1UF 25V ZF2125
C85	151-0265	CAP CER CP 0.1UF 25V ZF2125
C86	151-0265	CAP CER CP 0.1UF 25V ZF2125
C87	151-0265	CAP CER CP 0.1UF 25V ZF2125
C88	151-0265	CAP CER CP 0.1UF 25V ZF2125
C89	151-0265	CAP CER CP 0.1UF 25V ZF2125
C90	151-0265	CAP CER CP 0.1UF 25V ZF2125
C91	151-0265	CAP CER CP 0.1UF 25V ZF2125
C92	NOT USED	NOT USED
C93	NOT USED	NOT USED
C94	NOT USED	NOT USED
C95	NOT USED	NOT USED
C96	151-0270	CAP CER CP 47PF 50V KSL2125
C97	NOT USED	NOT USED
C98	NOT USED	NOT USED
C99	NOT USED	NOT USED
C102	NOT USED	NOT USED
C103	151-0265	CAP CER CP 0.1UF 25V ZF2125
C104	151-0265	CAP CER CP 0.1UF 25V ZF2125
C105	151-0265	CAP CER CP 0.1UF 25V ZF2125
C106	151-0265	CAP CER CP 0.1UF 25V ZF2125
C107	151-0265	CAP CER CP 0.1UF 25V ZF2125
C108	151-0265	CAP CER CP 0.1UF 25V ZF2125
C109	151-0298	CAP CER CP 100PF 50V JSL2125
C110	151-0298	CAP CER CP 100PF 50V JSL2125
C111	151-0592	CAP CER CP 5PF/50V CCH2125
C112	NOT USED	NOT USED
C114	NOT USED	NOT USED
C115	151-0265	CAP CER CP 0.1UF 25V ZF2125
C116	151-0265	CAP CER CP 0.1UF 25V ZF2125
C117	151-0265	CAP CER CP 0.1UF 25V ZF2125
C118	151-0265	CAP CER CP 0.1UF 25V ZF2125
C119	151-0265	CAP CER CP 0.1UF 25V ZF2125
C120	151-0265	CAP CER CP 0.1UF 25V ZF2125
C121	151-0298	CAP CER CP 100PF 50V JSL2125
C122	151-0298	CAP CER CP 100PF 50V JSL2125
C123	151-0298	CAP CER CP 100PF 50V JSL2125
C124	151-0298	CAP CER CP 100PF 50V JSL2125
C125	NOT USED	NOT USED
C126	NOT USED	NOT USED
C127	151-0265	CAP CER CP 0.1UF 25V ZF2125
C129	151-0320	CAP CER CP 68PF 50V J CH2125
C130	151-0623	CAP CER CP 1UF 16V ZF2125
C131	151-0623	CAP CER CP 1UF 16V ZF2125
C132	151-0623	CAP CER CP 1UF 16V ZF2125
C133	151-0623	CAP CER CP 1UF 16V ZF2125
C134	151-0623	CAP CER CP 1UF 16V ZF2125
C135	151-0623	CAP CER CP 1UF 16V ZF2125
C136	151-0623	CAP CER CP 1UF 16V ZF2125
C137	151-0623	CAP CER CP 1UF 16V ZF2125
C138	151-0623	CAP CER CP 1UF 16V ZF2125
C139	151-0623	CAP CER CP 1UF 16V ZF2125
C140	151-0623	CAP CER CP 1UF 16V ZF2125
C141	151-0623	CAP CER CP 1UF 16V ZF2125
CE1	151-0623	CAP CER CP 1UF 16V ZF2125
CE2	151-0622	CAP CER CP 1UF 16V ZF3216
CE3	150-0313-04	CAP E CP 100UF6.3V MV6.3VC100M
CE3	150-0313-01	CAP E CP 100UF 6.3V ECEV0JA101
CE3	150-0313-03	CAP E CP 100UF6.3V UWX0J101MCR
CE3	150-0313-05	CAP E CP 100UF 6.3V REV

Circuit No.	Parts No.	Description
CE4	151-0622	CAP CER CP 1UF 16V ZF3216
CE6	150-0313-04	CAP E CP 100UF6.3V MV6.3VC100M
CE6	150-0313-01	CAP E CP 100UF 6.3V ECEV0JA101
CE6	150-0313-03	CAP E CP 100UF6.3V UWX0J101MCR
CE6	150-0313-05	CAP E CP 100UF 6.3V REV
CE15	150-0464	CAP E CP 10UF16V MV16VC10M055
CE15	150-0464-01	CAP E CP 10UF 16V ECEV1CA100
CE15	150-0464-02	CAP E CP 10UF 16V UWX1C100MCR1
CE15	150-0464-03	CAP E CP 10UF16V REV
CE16	150-0464	CAP E CP 10UF16V MV16VC10MD55
CE16	150-0464-01	CAP E CP 10UF 16V ECEV1CA100
CE16	150-0464-02	CAP E CP 10UF 16V UWX1C100MCR1
CE16	150-0464-03	CAP E CP 10UF16V REV
CE18	150-0313-04	CAP E CP 100UF6.3V MV6.3VC100M
CE18	150-0313-01	CAP E CP 100UF 6.3V ECEV0JA101
CE18	150-0313-03	CAP E CP 100UF6.3V UWX0J101MCR
CE18	150-0313-05	CAP E CP 100UF 6.3V REV
CE19	150-0313-04	CAP E CP 100UF6.3V MV6.3VC100M
CE19	150-0313-01	CAP E CP 100UF 6.3V ECEV0JA101
CE19	150-0313-03	CAP E CP 100UF6.3V UWX0J101MCR
CE19	150-0313-05	CAP E CP 100UF 6.3V REV
CE20	150-0464	CAP E CP 10UF16V MV16VC10MD55
CE20	150-0464-01	CAP E CP 10UF 16V ECEV1CA100
CE20	150-0464-02	CAP E CP 10UF 16V UWX1C100MCR1
CE20	150-0464-03	CAP E CP 10UF16V REV
CE21	150-0464	CAP E CP 10UF16V MV16VC10M055
CE21	150-0464-01	CAP E CP 10UF 16V ECEV1CA100
CE21	150-0464-02	CAP E CP 10UF 16V UWX1C100MCR1
CE21	150-0464-03	CAP E CP 10UF16V REV
CE22	150-0496	CAP E CP 4.7UF 25V MV25VC4R7M
CE22	150-0496-01	CAP E CP 4.7UF 25V ECEV1EA4R7
CE22	150-0496-02	CAP E CP 4.7UF25V UWX1E4R7MCR1
CE22	150-0496-03	CAP E CP 4.7UF25V REV
CE23	150-0464	CAP E CP 10UF16V MV16VC10M055
CE23	150-0464-01	CAP E CP 10UF 16V ECEV1CA100
CE23	150-0464-02	CAP E CP 10UF 16V UWX1C100MCR1
CE23	150-0464-03	CAP E CP 10UF16V REV
CE24	150-0423	CAP E CP 220UF 4V MV4VC220MF55
CE24	150-0423-01	CAP E CP 220UF 4V ECEV0GA221
CE24	150-0423-02	CAP E CP 220UF 4V UWX0G221MCR1
CE24	150-0423-03	CAP E CP 220UF 4V REV
CE25	150-0423	CAP E CP 220UF 4V MV4VC220MF55
CE25	150-0423-01	CAP E CP 220UF 4V ECEV0GA221
CE25	150-0423-02	CAP E CP 220UF 4V UWX0G221MCR1
CE25	150-0423-03	CAP E CP 220UF 4V REV
CE26	150-0423	CAP E CP 220UF 4V MV4VC220MF55
CE26	150-0423-01	CAP E CP 220UF 4V ECEV0GA221
CE26	150-0423-02	CAP E CP 220UF 4V UWX0G221MCR1
CE26	150-0423-03	CAP E CP 220UF 4V REV
CE27	150-0423	CAP E CP 220UF 4V MV4VC220MF55
CE27	150-0423-01	CAP E CP 220UF 4V ECEV0GA221
CE27	150-0423-02	CAP E CP 220UF 4V UWX0G221MCR1
CE27	150-0423-03	CAP E CP 220UF 4V REV
CE28	150-0423	CAP E CP 220UF 4V MV4VC220MF55
CE28	150-0423-01	CAP E CP 220UF 4V ECEV0GA221
CE28	150-0423-02	CAP E CP 220UF 4V UWX0G221MCR1
CE28	150-0423-03	CAP E CP 220UF 4V REV
CE29	150-0423	CAP E CP 220UF 4V MV4VC220MF55
CE29	150-0423-01	CAP E CP 220UF 4V ECEV0GA221
CE29	150-0423-02	CAP E CP 220UF 4V UWX0G221MCR1
CE29	150-0423-03	CAP E CP 220UF 4V REV
CE30	150-0505-02	CAP E CP 220UF10V UUR1A221MBR
CE31	150-0464	CAP E CP 10UF16V MV16VC10M055

Circuit No.	Parts No.	Description
CE31	150-0464-01	CAP E CP 10UF 16V ECEV1CA100
CE31	150-0464-02	CAP E CP 10UF 16V UWX1C100MCR1
CE31	150-0464-03	CAP E CP 10UF16V REV
CE32	153-0120	CAP TANT CHIP 10UF 6.3V NEC
CE32	153-0120-01	CAP TANT CHIP 10UF 6.3V PANA
CE32	153-0120-02	CAP TANT CHIP 10UF 6.3V NICHI
CE32	153-0120-03	CAP TANT CHIP 10UF 6.3V TOWA
CE33	150-0494	CAP E CP 22UF 6.3V MV6.3VC22M
CE33	150-0494-01	CAP E CP 22UF 6.3V ECEV0JA220
CE33	150-0494-02	CAP E CP 22UF6.3V UWX0J220MCR1
CE33	150-0494-03	CAP E CP 22UF 6.3V REV
CE34	150-0494	CAP E CP 22UF 6.3V MV6.3VC22M
CE34	150-0494-01	CAP E CP 22UF 6.3V ECEV0JA220
CE34	150-0494-02	CAP E CP 22UF6.3V UWX0J220MCR1
CE34	150-0494-03	CAP E CP 22UF 6.3V REV
CE35	150-0501	CAP E CP 47UF 6.3V MV6.3VC47M
CE35	150-0501-01	CAP E CP 47UF 6.3V ECEV0JA470
CE35	150-0501-02	CAP E CP 47UF6.3V UWX0J470MCR1
CE35	150-0501-03	CAP E CP 47UF 6.3V REV
CE37	150-0464	CAP E CP 10UF16V MV16VC10MD55
CE37	150-0464-01	CAP E CP 10UF 16V ECEV1CA100
CE37	150-0464-02	CAP E CP 10UF 16V UWX1C100MCR1
CE37	150-0464-03	CAP E CP 10UF16V REV
CE38	NOT USED	NOT USED
CE42	150-0464	CAP E CP 10UF 16V MV16VC10MD55
CE42	150-0464-01	CAP E CP 10UF 16V ECEV1CA100
CE42	150-0464-02	CAP E CP 10UF 16V UWX1C100MCR1
CE42	150-0464-03	CAP E CP 10UF 16V REV
CE45	150-0504	CAP E 330UF USR0J331MCA1TO
CE46	150-0504	CAP E 330UF USR0J331MCA1TO
CE47	150-0463	CAP E CP 1UF 50V MV50VC1MD55
CE47	150-0463-01	CAP E CP 1UF 50V ECEV1HA010
CE47	150-0463-02	CAP E CP 1UF 50V UWX1H010MCR1
CE47	150-0463-03	CAP E CP 1UF 50V REV
CE48	150-0463	CAP E CP 1UF 50V MV50VC1MD55
CE48	150-0463-01	CAP E CP 1UF 50V ECEV1HA010
CE48	150-0463-02	CAP E CP 1UF 50V UWX1H010MCR1
CE48	150-0463-03	CAP E CP 1UF 50V REV
CE49	150-0501	CAP E CP 47UF 6.3V MV6.3VC47M
CE49	150-0501-01	CAP E CP 47UF 6.3V ECEV0JA470
CE49	150-0501-02	CAP E CP 47UF 6.3V UWX0J470MCR1
CE49	150-0501-03	CAP E CP 47UF 6.3V REV
CE50	150-0501	CAP E CP 47UF 6.3V MV6.3VC47M
CE50	150-0501-01	CAP E CP 47UF 6.3V ECEV0JA470
CE50	150-0501-02	CAP E CP 47UF 6.3V UWX0J470MCR1
CE50	150-0501-03	CAP E CP 47UF 6.3V REV
CE52	150-0464	CAP E CP 10UF 16V MV16VC10MD55
CE52	150-0464-01	CAP E CP 10UF 16V ECEV1CA100
CE52	150-0464-02	CAP E CP 10UF 16V UWX1C100MCR1
CE52	150-0464-03	CAP E CP 10UF 16V REV
CE53	150-0501	CAP E CP 47UF 6.3V MV6.3VC47M
CE53	150-0501-01	CAP E CP 47UF 6.3V ECEV0JA470
CE53	150-0501-02	CAP E CP 47UF 6.3V UWX0J470MCR1
CE53	150-0501-03	CAP E CP 47UF 6.3V REV
CE54	150-0520-03	CAP E CP 100UF 10V UWX1AMCR1
CE54	150-0522-03	CAP E CP 100UF 10V UUR1A101MCR
R1	476-2101-J-10	RES CHIP 100 OHM 1/10W 5%
R2	476-2101-J-10	RES CHIP 100 OHM 1/10W 5%
R3	476-2101-J-10	RES CHIP 100 OHM 1/10W 5%
R4	476-2302-J-10	RES CHIP 3KOHM 1/10W 5%
R5	476-2302-J-10	RES CHIP 3KOHM 1/10W 5%
R19	476-2105-J-10	RES CHIP 1MOHM 1/10W 5%
R20	476-2680-J-10	RES CHIP 68 OHM 1/10W 5%
R21	476-2222-J-10	RES CHIP 2.2KOHM 1/10W 5%
R22	476-2111-J-10	RES CHIP 110 OHM 1/10W 5%
R24	476-2303-J-10	RES CHIP 30KOHM 1/10W 5%
R25	476-2303-J-10	RES CHIP 30KOHM 1/10W 5%
R26	476-2362-J-10	RES CHIP 3.6KOHM 1/10W 5%
R27	476-2363-J-10	RES CHIP 36KOHM 1/10W 5%
R28	476-2621-J-10	RES CHIP 620 OHM 1/10W 5%
R29	NOT USED	NOT USED
R30	476-2102-J-10	RES CHIP 1KOHM 1/10W 5%
R31	476-2102-J-10	RES CHIP 1KOHM 1/10W 5%
R32	476-2102-J-10	RES CHIP 1KOHM 1/10W 5%
R33	476-2222-J-10	RES CHIP 2.2KOHM 1/10W 5%
R35	476-2473-J-10	RES CHIP 47KOHM 1/10W 5%
R36	476-2750-J-10	RES CHIP 75 OHM 1/10W 5%
R37	476-2750-J-10	RES CHIP 75 OHM 1/10W 5%
R38	476-2750-J-10	RES CHIP 75 OHM 1/10W 5%
R39	476-2750-J-10	RES CHIP 75 OHM 1/10W 5%
R40	476-2750-J-10	RES CHIP 75 OHM 1/10W 5%
R41	476-2750-J-10	RES CHIP 75 OHM 1/10W 5%
R42	476-2163-F-10	RES CHIP 16KOHM 1/10W 1%
R43	476-2101-J-10	RES CHIP 100 OHM 1/10W 5%
R44	476-2101-J-10	RES CHIP 100 OHM 1/10W 5%
R45	476-2104-J-10	RES CHIP 100KOHM 1/10W 5%
R46	476-2104-J-10	RES CHIP 100KOHM 1/10W 5%
R47	476-2472-J-10	RES CHIP 4.7KOHM 1/10W 5%
R48	476-2201-J-10	RES CHIP 200 OHM 1/10W 5%
R49	476-2472-J-10	RES CHIP 4.7KOHM 1/10W 5%
R50	476-2472-J-10	RES CHIP 4.7KOHM 1/10W 5%
R66	476-2472-J-10	RES CHIP 4.7KOHM 1/10W 5%
R67	476-2105-J-10	RES CHIP 1MOHM 1/10W 5%
R68	476-2334-J-10	RES CHIP 330KOHM 1/10W 5%
R69	476-2103-J-10	RES CHIP 10KOHM 1/10W 5%
R74	476-2103-J-10	RES CHIP 10KOHM 1/10W 5%
R96	NOT USED	NOT USED
R97	NOT USED	NOT USED
R98	476-2103-J-10	RES CHIP 10KOHM 1/10W 5%
R99	NOT USED	NOT USED
R100	476-2103-J-10	RES CHIP 10KOHM 1/10W 5%
R101	476-2103-J-10	RES CHIP 10KOHM 1/10W 5%
R102	476-2103-J-10	RES CHIP 10KOHM 1/10W 5%
R103	476-2103-J-10	RES CHIP 10KOHM 1/10W 5%
R104	476-2103-J-10	RES CHIP 10KOHM 1/10W 5%
R105	476-2103-J-10	RES CHIP 10KOHM 1/10W 5%
R106	476-2103-J-10	RES CHIP 10KOHM 1/10W 5%
R107	476-2103-J-10	RES CHIP 10KOHM 1/10W 5%
R108	476-2103-J-10	RES CHIP 10KOHM 1/10W 5%
R109	476-2103-J-10	RES CHIP 10KOHM 1/10W 5%
R110	476-2103-J-10	RES CHIP 10KOHM 1/10W 5%
R111	476-2103-J-10	RES CHIP 10KOHM 1/10W 5%
R112	476-2103-J-10	RES CHIP 10KOHM 1/10W 5%
R113	476-2103-J-10	RES CHIP 10KOHM 1/10W 5%
R114	NOT USED	NOT USED
R115	NOT USED	NOT USED
R116	NOT USED	NOT USED
R117	NOT USED	NOT USED
R118	NOT USED	NOT USED
R119	NOT USED	NOT USED
R120	476-2103-J-10	RES CHIP 10KOHM 1/10W 5%
R121	NOT USED	NOT USED
R122	476-2103-J-10	RES CHIP 10KOHM 1/10W 5%
R124	476-2472-J-10	RES CHIP 4.7KOHM 1/10W 5%
R125	476-2472-J-10	RES CHIP 4.7KOHM 1/10W 5%
R126	476-2101-J-10	RES CHIP 100 OHM 1/10W 5%
R127	476-2101-J-10	RES CHIP 100 OHM 1/10W 5%
R128	476-2101-J-10	RES CHIP 100 OHM 1/10W 5%
R129	476-2101-J-10	RES CHIP 100 OHM 1/10W 5%
R130	476-2101-J-10	RES CHIP 100 OHM 1/10W 5%

Circuit No.	Parts No.	Description
R131	476-2103-J-10	RES CHIP 10KOHM 1/10W 5%
R132	476-2103-J-10	RES CHIP 10KOHM 1/10W 5%
R133	476-2103-J-10	RES CHIP 10KOHM 1/10W 5%
R134	476-2103-J-10	RES CHIP 10KOHM 1/10W 5%
R135	476-2103-J-10	RES CHIP 10KOHM 1/10W 5%
R136	476-2361-J-10	RES CHIP 360 OHM 1/10W 5%
R137	476-2104-J-10	RES CHIP 100KOHM 1/10W 5%
R138	476-2103-J-10	RES CHIP 10KOHM 1/10W 5%
R139	NOT USED	NOT USED
R140	476-2301-J-10	RES CHIP 300 OHM 1/10W 5%
R141	476-2512-J-10	RES CHIP 5.1KOHM 1/10W 5%
R142	476-2222-J-10	RES CHIP 2.2KOHM 1/10W 5%
R143	476-2511-J-10	RES CHIP 510 OHM 1/10W 5%
R144	476-2511-J-10	RES CHIP 510 OHM 1/10W 5%
R145	476-2103-J-10	RES CHIP 10KOHM 1/10W 5%
R146	476-2103-J-10	RES CHIP 10KOHM 1/10W 5%
R147	476-2103-J-10	RES CHIP 10KOHM 1/10W 5%
R148	476-2391-J-10	RES CHIP 390 OHM 1/10W 5%
R149	476-2224-J-10	RES CHIP 220KOHM 1/10W 5%
R150	476-2511-J-10	RES CHIP 510 OHM 1/10W 5%
R151	476-2511-J-10	RES CHIP 510 OHM 1/10W 5%
R152	476-2103-J-10	RES CHIP 10KOHM 1/10W 5%
R153	NOT USED	NOT USED
R154	NOT USED	NOT USED
R155	NOT USED	NOT USED
R156	NOT USED	NOT USED
R157	NOT USED	NOT USED
R158	NOT USED	NOT USED
R160	479-5005-0000	RES CHIP 0 OHM 1/10W 2125
RA1	477-0170	R-PK CP 8*10KOHM 1/16W 5% W/C
RA1	477-0170-02	R-PK CP 8*10KOHM 1/16W 5% W/C
RA1	477-0170-01	R-PK CP 8*10KOHM 1/16W 5% W/C
RA2	477-0170	R-PK CP 8*10KOHM 1/16W 5% W/C
RA2	477-0170-02	R-PK CP 8*10KOHM 1/16W 5% W/C
RA2	477-0170-01	R-PK CP 8*10KOHM 1/16W 5% W/C
RA3	477-0170	R-PK CP 8*10KOHM 1/16W 5% W/C
RA3	477-0170-02	R-PK CP 8*10KOHM 1/16W 5% W/C
RA3	477-0170-01	R-PK CP 8*10KOHM 1/16W 5% W/C
RA4	477-0170	R-PK CP 8*10KOHM 1/16W 5% W/C
RA4	477-0170-02	R-PK CP 8*10KOHM 1/16W 5% W/C
RA4	477-0170-01	R-PK CP 8*10KOHM 1/16W 5% W/C
RA5	477-0170	R-PK CP 8*10KOHM 1/16W 5% W/C
RA5	477-0170-02	R-PK CP 8*10KOHM 1/16W 5% W/C
RA5	477-0170-01	R-PK CP 8*10KOHM 1/16W 5% W/C
RA6	477-0170	R-PK CP 8*10KOHM 1/16W 5% W/C
RA6	477-0170-02	R-PK CP 8*10KOHM 1/16W 5% W/C
RA6	477-0170-01	R-PK CP 8*10KOHM 1/16W 5% W/C
RA7	477-0170	R-PK CP 8*10KOHM 1/16W 5% W/C
RA7	477-0170-02	R-PK CP 8*10KOHM 1/16W 5% W/C
RA7	477-0170-01	R-PK CP 8*10KOHM 1/16W 5% W/C
RA8	477-0170	R-PK CP 8*10KOHM 1/16W 5% W/C
RA8	477-0170-02	R-PK CP 8*10KOHM 1/16W 5% W/C
RA8	477-0170-01	R-PK CP 8*10KOHM 1/16W 5% W/C
X1	230-5202	OSC XTAL 17.7344MHZ +-20PPM
X2	NOT USED	NOT USED
X3	230-5169	CERAMIC RESONATOR CST4.00MGW
X4	230-5170-01	XTAL 32.768KHZ +-20PPM SEIKO
JP1	NOT USED	NOT USED
JP2	476-2104-J-10	RES CHIP 100KOHM 1/10W 50%
JP3	NOT USED	NOT USED
JP4	NOT USED	NOT USED
JP5	NOT USED	NOT USED
JP6	NOT USED	NOT USED
JP7	NOT USED	NOT USED
JP8	NOT USED	NOT USED
JP9	NOT USED	NOT USED
JP10	NOT USED	NOT USED
JP11	NOT USED	NOT USED
JP12	NOT USED	NOT USED
JP13	NOT USED	NOT USED
JP14	514-5069	RES CHIP 0 OHM 1/10W 2125
JP15	514-5069	RES CHIP 0 OHM 1/10W 2125
JP16	514-5069	RES CHIP 0 OHM 1/10W 2125
JP17	514-5069	RES CHIP 0 OHM 1/10W 2125
JP18	NOT USED	NOT USED
JP19	NOT USED	NOT USED
JP20	476-2102-J-10	RES CHIP 1KOHM 1/10W 5%
JP21	NOT USED	NOT USED
JP22	NOT USED	NOT USED
IC SOCKE	213-0113	IC SOCKET 40PIN ICE-406-S-TG T
8S HOL R	029-000034-08	8-TITE SCR PH 8LK 3X8R
8S HOL L	029-000034-08	8-TITE SCR PH 8LK 3X8R
FUSE	600-6458	JUMPER WIRE L=10MM

11-3-2. SATURN POWER INDICATOR BD VA0

CN13	600-6452	WIRE HARN 2P FOR POWER LED
L01	390-5511	LED SL8-25MG GREEN

11-3-3. SATURN R.SW BD VA0

LD2	390-5568	LED SLB-250L13F ORANGE
SW1	510-5063	TACT SW SKEYAC
CN14	600-6451	WIRE HARN 5P FOR RESET 8T

11-3-4. PC BD SH1 FOR SATURN

IC101	315-5785	IC CUSTOM CHIP SH1 QFP
IC101	315-5785A	IC CUSTOM CHIP SH1A QFP
IC102	315-0947-80	IC HM514260AJ-8 SOJ
IC103	315-5873	IC CUSTOM CHIP OCU YGR019A
E101	212-5473	CONN 100P FX6-100P-0.8SV2
E102	212-5474	CONN 20P SD-52610-2017
L101	NOT USED	NOT USED
C101	NOT USED	NOT USED
C102	NOT USED	NOT USED
C103	151-0430	CAP CER CP 10PF 50V CH1608
C104	151-0430	CAP CER CP 10PF 50V CH1608
C105	151-0418	CAP CER CP 0.01UF/50V 8K1608
C106	151-0418	CAP CER CP 0.01UF/50V 8K1608
C107	151-0418	CAP CER CP 0.01UF/50V 8K1608
C108	NOT USED	NOT USED
C109	151-0418	CAP CER CP 0.01UF/50V 8K1608
C110	NOT USED	NOT USED
C111	151-0418	CAP CER CP 0.01UF/50V 8K1608
C112	NOT USED	NOT USED
C113	NOT USED	NOT USED
C114	NOT USED	NOT USED
C115	151-0418	CAP CER CP 0.01UF/50V 8K1608
C116	NOT USED	NOT USED
C117	NOT USED	NOT USED
C118	151-0418	CAP CER CP 0.01UF/50V 8K1608
C119	151-0418	CAP CER CP 0.01UF/50V 8K1608
C120	151-0418	CAP CER CP 0.01UF/50V 8K1608

11-4. Accessories/Package List

Circuit No.	Parts No.	Description
C121	150-0501	CAP E CP 47UF 6.3V MV6.3VC47M
C122	NDT USED	NOT USED
C123	151-0418	CAP CER CP 0.01UF/50V BK1608
C124	NDT USED	NOT USED
C125	NDT USED	NDT USED
C126	NDT USED	NOT USED
C127	NOT USED	NDT USED
C128	NOT USED	NDT USED
C129	NOT USED	NDT USED
C130	NOT USED	NDT USED
C131	NDT USED	NOT USED
C132	NOT USED	NOT USED
R101	476-11D3-J-16	RES CHIP 10KOHM 1/16W 5%
R102	476-11D3-J-16	RES CHIP 10KOHM 1/16W 5%
R1D3	476-11D3-J-16	RES CHIP 1DKDHM 1/16W 5%
R1D4	476-11D3-J-16	RES CHIP 1DKDHM 1/16W 5%
R1D5	476-11D3-J-16	RES CHIP 1DKOHM 1/16W 5%
R106	476-1472-J-16	RES CHIP 4.7KOHM 1/16W S%
R107	476-1472-J-16	RES CHIP 4.7KDHM 1/16W 5%
R108	476-1472-J-16	RES CHIP 4.7KOHM 1/16W 5%
R109	476-1222-J-16	RES CHIP 2.2KOHM 1/16W 5%
R11D	476-1472-J-16	RES CHIP 4.7KDHM 1/16W 5%
R111	NDT USED	NDT USED
R112	NDT USED	NDT USED
R113	476-1330-J-16	RES CHIP 33 OHM 1/16W 5%
R114	NDT USED	NDT USED
R115	NOT USED	NDT USED
R116	NOT USED	NOT USED
R117	NOT USED	NOT USED
R118	NOT USED	NOT USED
R119	NOT USED	NOT USED
RM101	477-0141-01	R-PK CP 4*330HM 1/16W 5%
RM102	477-0141-01	R-PK CP 4*330HM 1/16W 5%
RM103	477-D141-01	R-PK CP 4*33DHM 1/16W S%
RM104	477-0141-01	R-PK CP 4*33DHM 1/16W S%
X101	230-S196	XTAL 2DMHZ SMD-49
CN1	209-S077	EDGE CDNN 1D0P N63D-9S23-T00S

No.	Parts No.	Description	
1	61D-5B61	ASSY CP SAT EUR	
2	6DD-6540	RGB CABLE SATURN PAL	[A, B]
2	6D0-6540-D1	RGB CABLE SATURN PAL V2	[A, B]
3	610-586S	RF UNIT STURN TOWA PAL-G/I	[C]
4	600-6S37	AC CABLE SATURN PLUG=MF	[A]
4	6DD-6S38	AC CABLE SATURN PLUG=C	[B]
4	6D0-6538-01	AC CABLE SATURN PLUG=C	[B]
4	6D0-6S71	AC CABLE SATURN PLUG=S	[C]
5	672-23S9A	MANUAL HARD SATURN MULTI A	[A, B]
S	672-23S9B	MANUAL HARD SATURN MULTI B	[A, B]
S	672-24S0A	MANUAL HARD SATURN AUS A	[C]
6	SGM-4349	POLY BAG 340*340*D.05 EXP 6	
7	SGM-4363	PDLY BAG 200*310*0.05 EXP 6	

【Note】 [A]····UK
[B]····SDE
[C]····AUSTRALIA

SEGA™

© 1995 Sega Enterprises, Ltd.

Printed in Japan (I)
50630